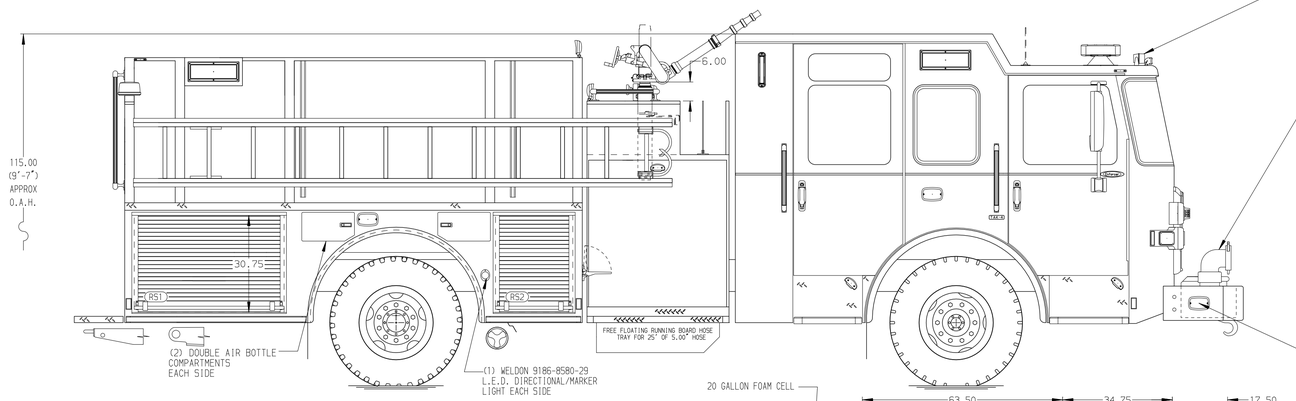


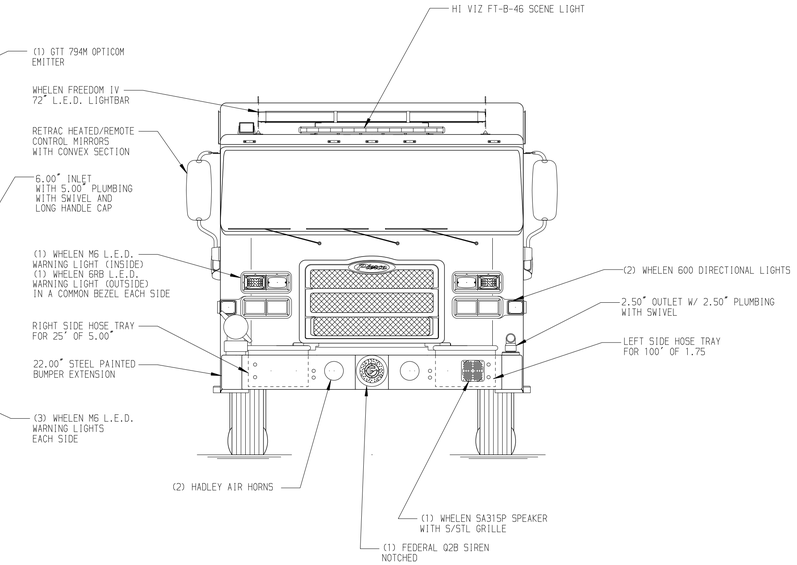


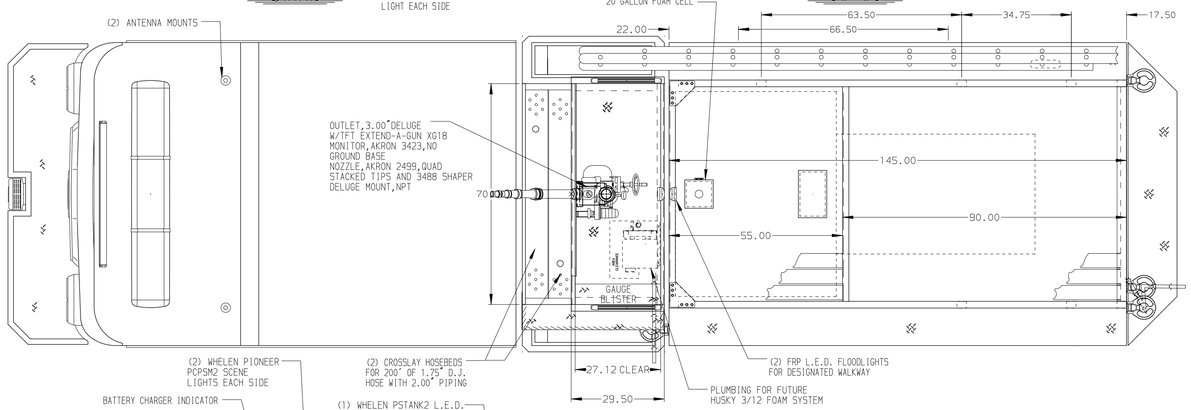


HOSEBED CAPACITIES

1. 200' OF 1.75" D.J. POLY HOSE
2. 400' OF 2.50" D.J. POLY HOSE
3. 1000' OF 5.00" D.J. POLY HOSE
4. 200' OF 1.75" D.J. POLY HOSE

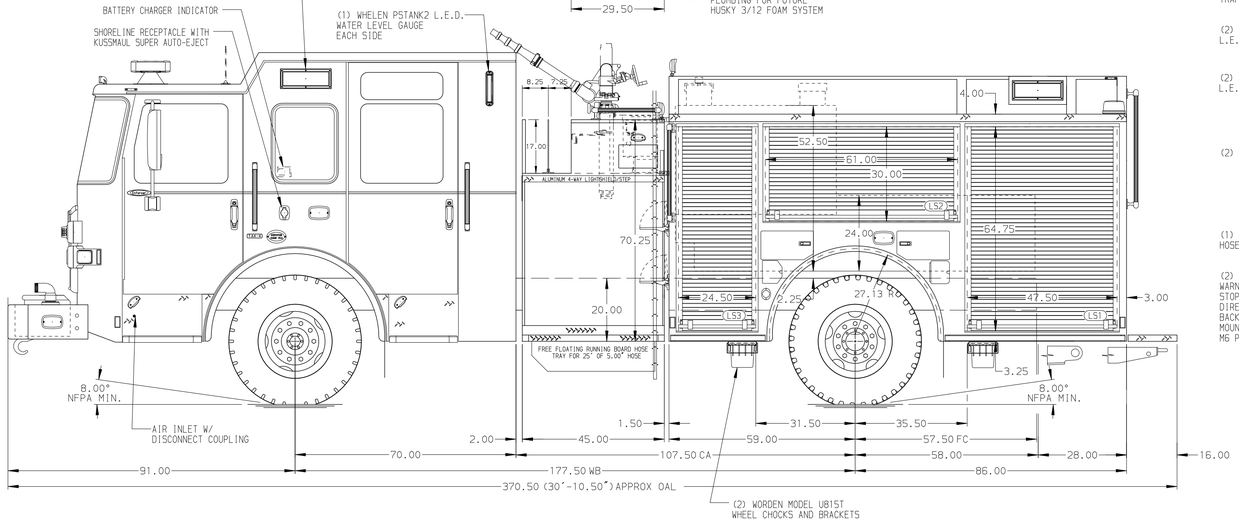


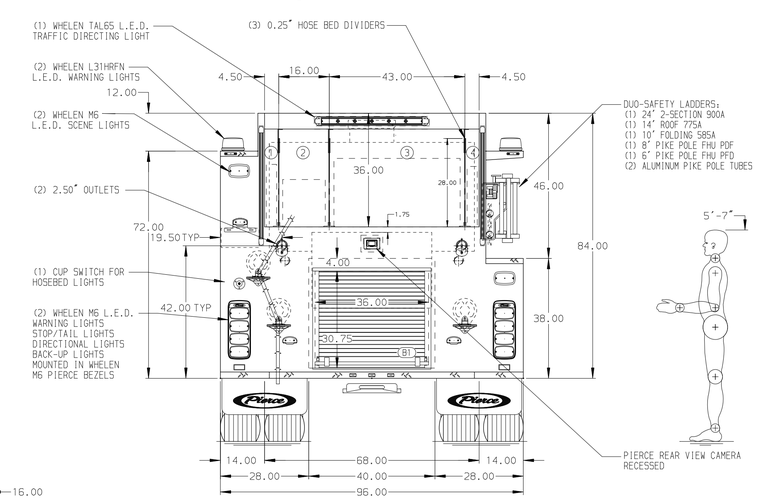


ALUMINUM BODY

SIDE ROLL AND FRONTAL PROTECTION

NOTE

DIMENSIONS SHOWN ARE APPROXIMATE AND ARE SUBJECT TO MINOR DEVIATIONS AS MAY OCCUR OR BE NECESSARY IN CONSTRUCTION.
MINOR DETAILS NOT SHOWN.

| REV | DATE | BY | CH |
|---|---|---|---|
| 7 | 14FEB25 | RHU | - |
| 6 | 05NOV24 | RHU | - |
| 5 | 12SET24 | ADP | - |

CHASSIS DATA: MAKE PIERCE; MODEL ENFORCER

Pierce MANUFACTURING INC.

TITLE: 1500GPM, 770G TANK, 750G WATER, 20G FOAM 145" BODY PUMPER, HARDWIRED

FOR: BELLINGHAM FIRE DEPARTMENT BELLINGHAM,MA

DWG NO.: 42320AD

| JOB NO. | 42320 |
|---|---|
| SCALE | 1:24 |
| DATE | |
| DRAWN BY | VHO 03JUL24 |
| CHECKED BY | JAP 03JUL24 |
| SHEET SIZE | D |
| SHEET NO. | 1 OF 1 |

View File Created 14-FEB-2025 09:34:01