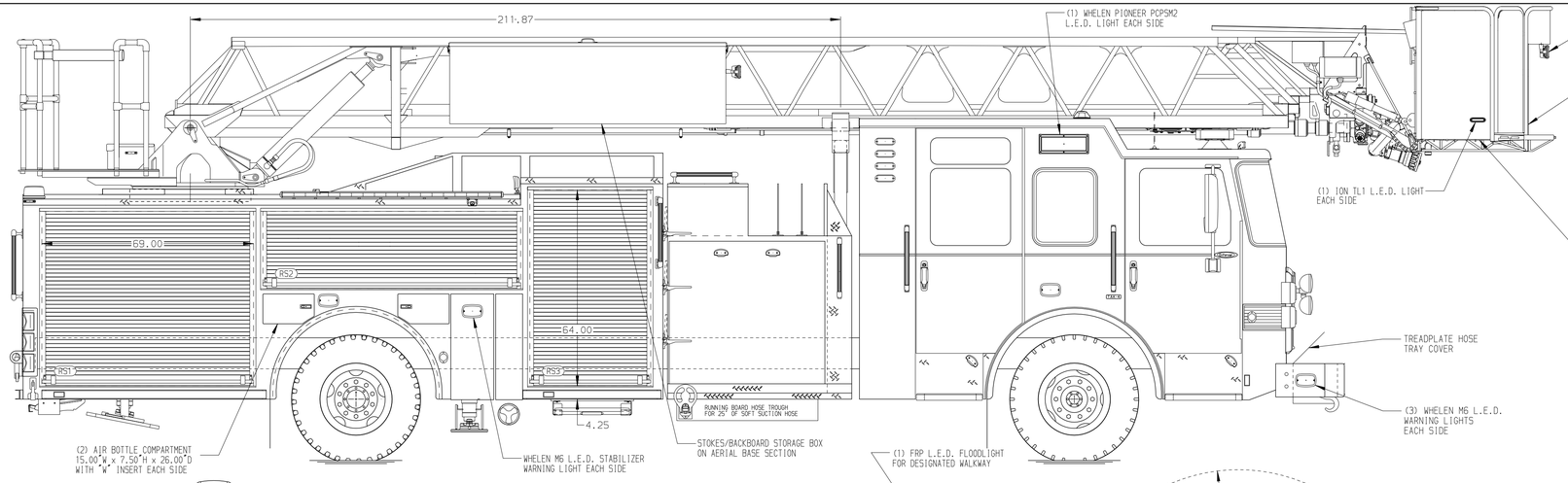

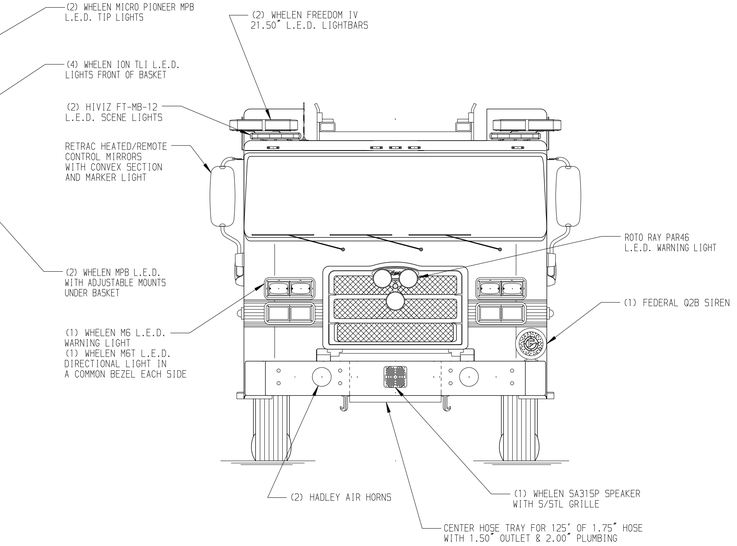

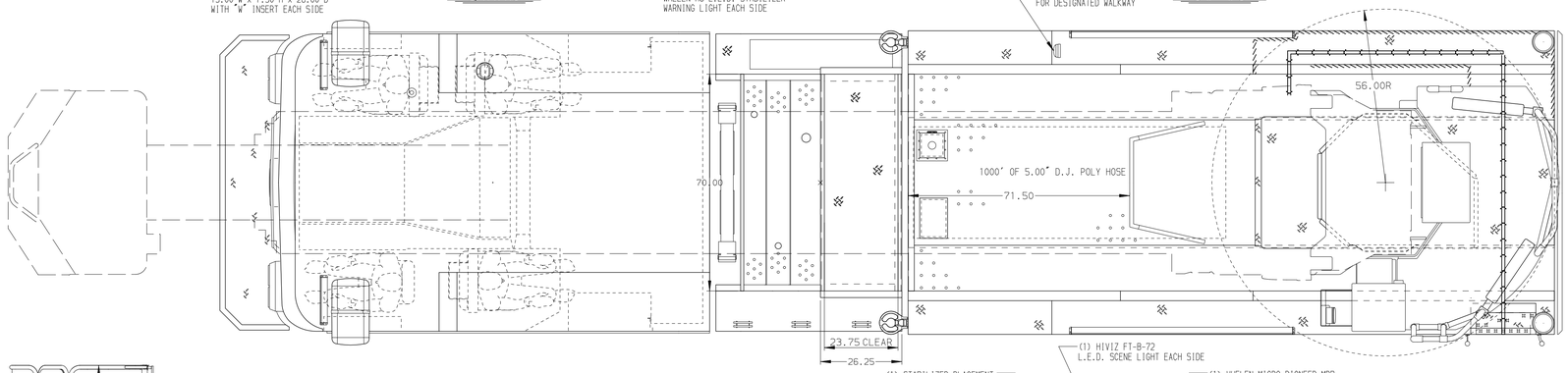

BODY	WATER TANK
110' Single Axle Platform Aluminum Body	500 Gallon Poly Water Tank
COMPT,LEFT SIDE FRONT	Foam System
Full Height Rollup Forward	Plumbing For Future Husky Foam System
COMPT,LEFT SIDE REAR	Foam Cell
Full Height Rollup Rearward	20 Gallon Foam Cell, Non Reduced Water
COMPT,RIGHT SIDE FRONT	
Full Height Rollup Forward	
COMPT,RIGHT SIDE REAR	
Full Height Rollup Rearward	

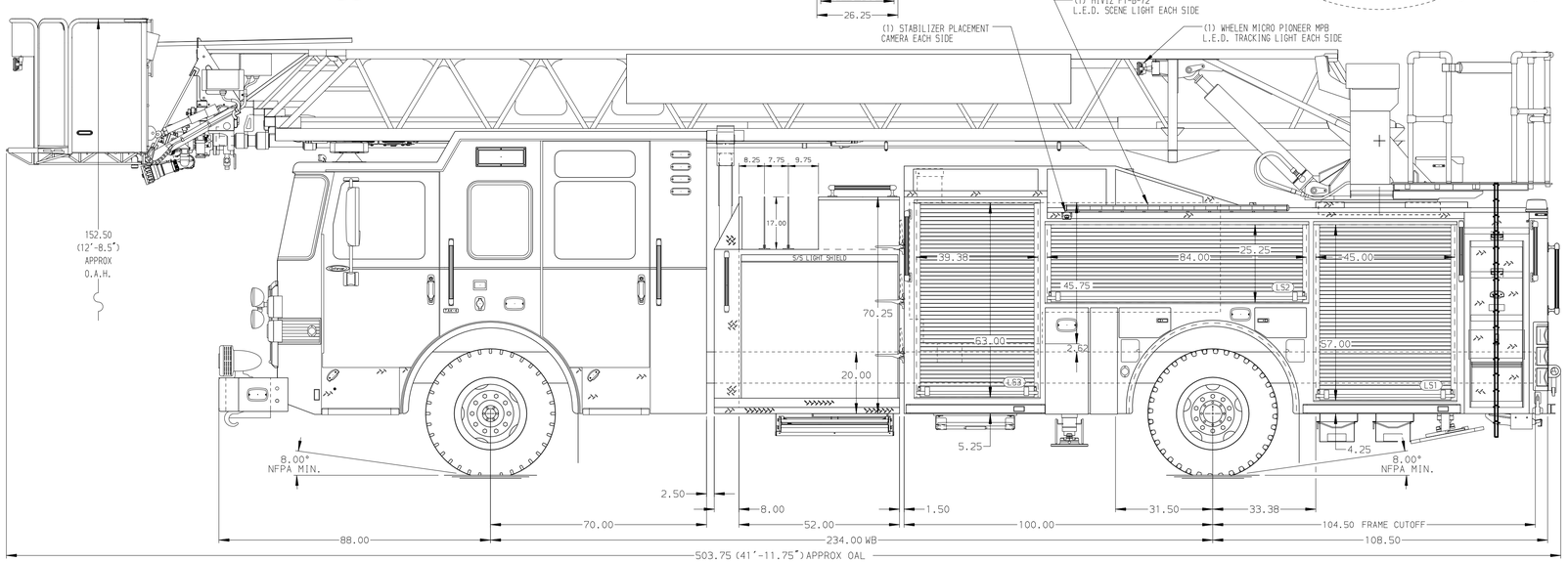

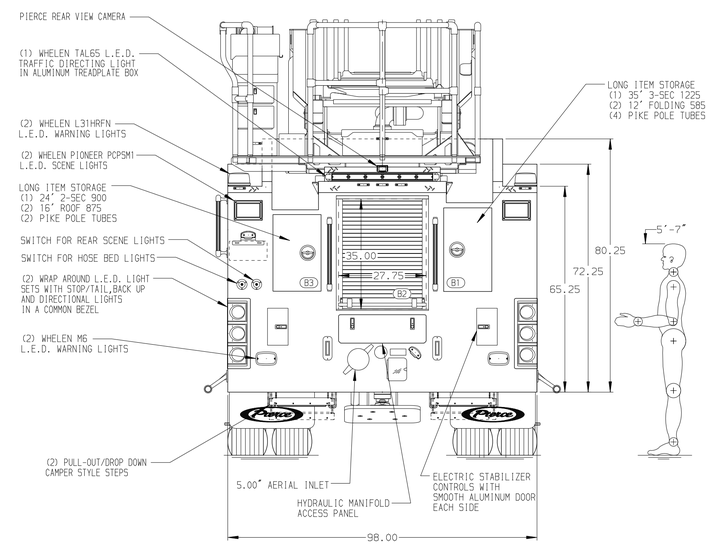

CHASSIS	CAB	AXLE,FRONT,CUSTOM	TRANSMISSION	PUMPHOUSE	CROSSLAYS,1.50"	SPEEDLAYS
Enforcer Chassis	7010 Notched Enforcer Cab	24,000 Lb TAK-4 Axle	ALlison 6th Gen, 3000 EVS P	52" Control Zone Side Mount	(2) 1.50" Standard Capacity	Speedlays Not Required
ENGINE	BUMPER	AXLE,REAR		PUMP	CROSSLAYS,2.50"	GENERATOR
450 HP Cummins L9 Engine	19" Extended Painted Steel	33,500 Lb Meritor Axle		2000 GPM Waterous CSU	(1) 2.50" Standard Capacity	Generator Not Required

CUSTOMER APPROVAL

APPROVED BY: _____

DATE: _____

Pierce MANUFACTURING INC.

NOTE

DIMENSIONS SHOWN ARE APPROXIMATE AND ARE SUBJECT TO MINOR DEVIATIONS AS MAY OCCUR OR BE NECESSARY IN CONSTRUCTION.
MINOR DETAILS NOT SHOWN.

1. SHORELINE RECEPTACLE WITH KUSSMAUL SUPER AUTO-EJECT LOCATED ON DRIVER SIDE OF THE CAB
2. AIR INLET WITH DISCONNECT COUPLING LOCATED FORWARD IN THE DRIVER SIDE STEPWELL
3. BATTERY CHARGER LOCATED BEHIND DRIVER SEAT
4. BATTERY CHARGE INDICATOR LOCATED BEHIND DRIVER SIDE CAB DOOR
5. DUAL L.E.D. LIGHT STRIPS LOCATED IN COMPARTMENTS PER ORDER
6. SIX ADJUSTABLE SHELVES LOCATED IN COMPARTMENTS PER ORDER
7. FOUR FLOOR MOUNTED SLIDE-OUT TRAYS LOCATED IN COMPARTMENTS PER ORDER
8. ONE RECEPTACLE LOCATED IN COMPARTMENT PER ORDER
9. TECHNIQ RUNG LIGHTING AT AERIAL DEVICE
10. NON-RAISED AERIAL PEDESTAL
11. 1500 GPM HIGH FLOW WATERWAY
12. LIMITED RETRACTION NOT REQUIRED

REV	DATE	BY	CH
V	13MAY24	ANZ	AST

CHASSIS DATA
MAKE: PIERCE
MODEL: ENFORCER

TITLE: 110' ASCENDANT AERIAL LADDER AND BODY ASSEMBLY
-
FOR: CITY OF LAKE MILLS
LAKE MILLS, WI

DWG NO.: 41851AD

JOB NO.	41851
SCALE	1:24
DATE	
DRAWN BY	ANZ 20NOV23
CHECKED BY	THS 22NOV23
SHEET SIZE	D
SHEET NO.	1 OF 1

View File Created 22-MAY-2024 08:33:19