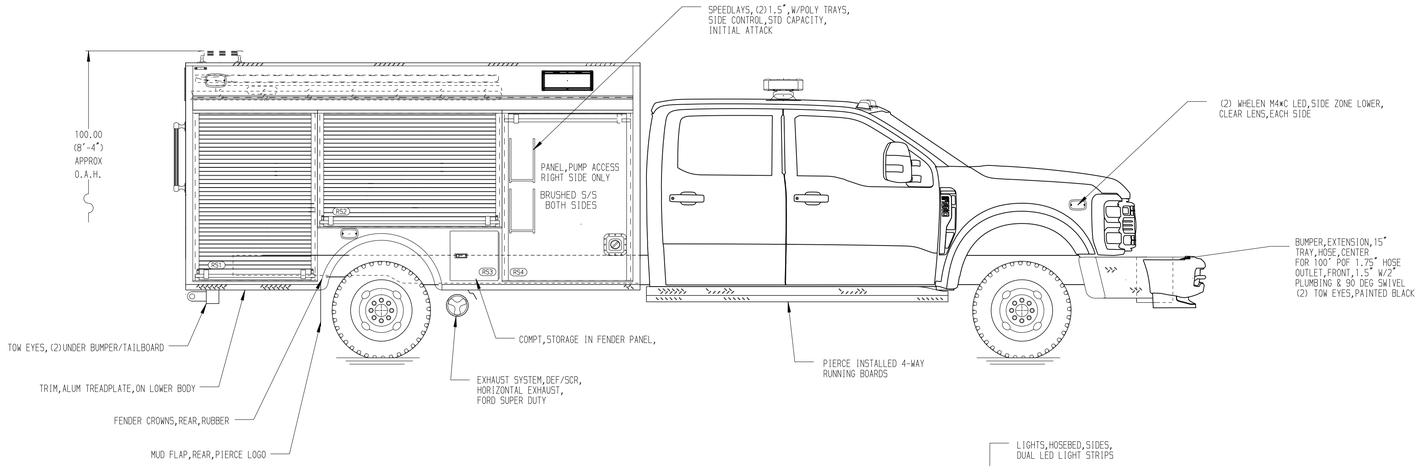

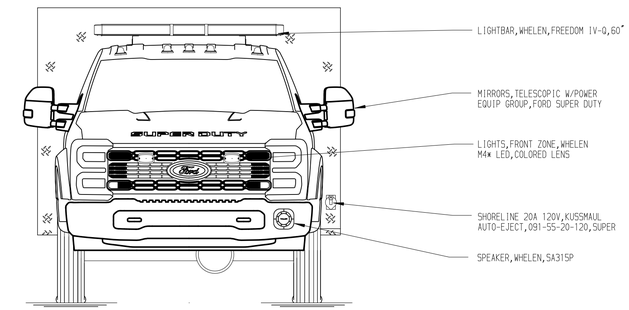

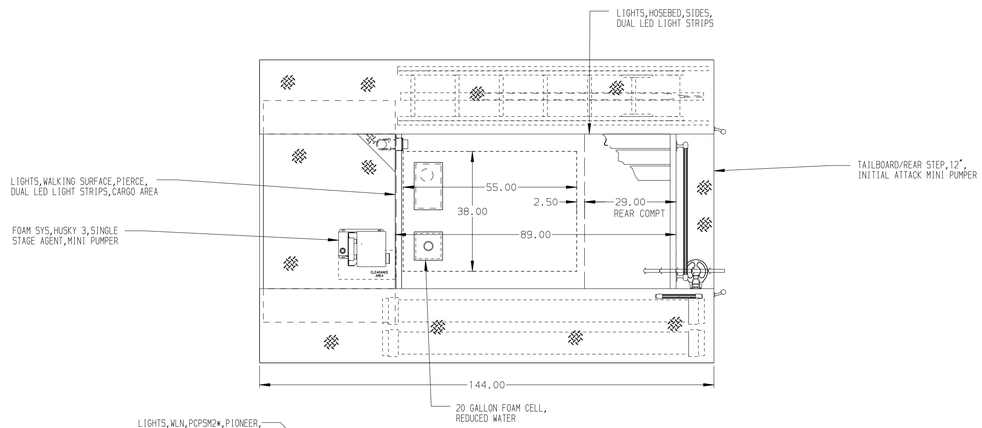

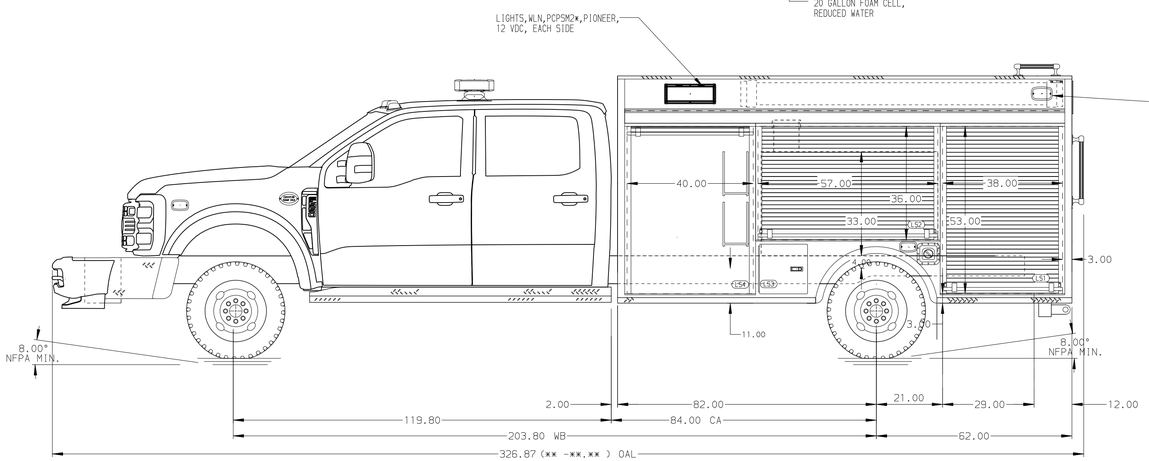

HOSEBED CAPACITIES

1. 400' OF 1.50" D.J. POLYESTER HOSE
2. 300' OF 2.50" D.J. POLYESTER HOSE

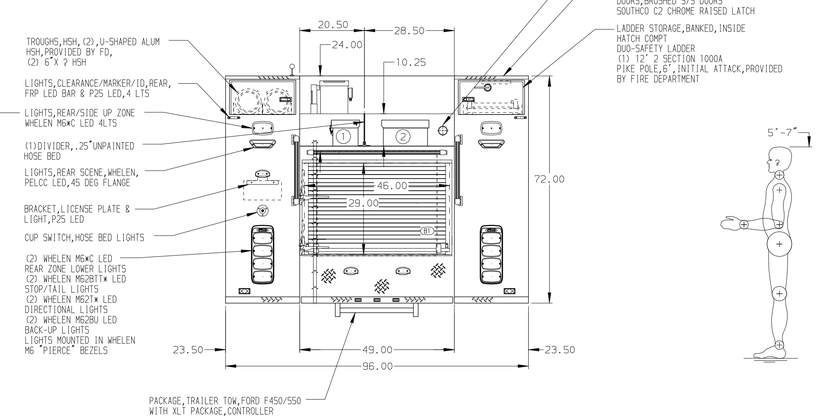

ALUMINUM BODY

NOTE

DIMENSIONS SHOWN ARE APPROXIMATE AND ARE SUBJECT TO MINOR DEVIATIONS AS MAY OCCUR OR BE NECESSARY IN CONSTRUCTION.
MINOR DETAILS NOT SHOWN.

REV.	DATE	BY	CHK'D
▽	-	-	-

CHASSIS DATA
CHASSIS FORD
MODEL F-550 4X4

Pierce MANUFACTURING INC.
BRADENTON, FLORIDA

TITLE	1500-D-230 POLY, 20 FOAM, 84"CA, MINI PUMPER BODY (2) SPEEDLAYS	JOB NO.	41574
		DATE	SCALE 1:24
FOR	PIERCE FIELD UNIT (ORIGINAL) APPLETON, WISCONSIN	12JUN24	DRAWN BY VHO
		13JUN24	CHK'D BY JAP
DRWG. NO.	41574AD	SHEET NO. 1 OF 1	SHEET SIZE D

View File Created 13-JUN-2024 07:48:55