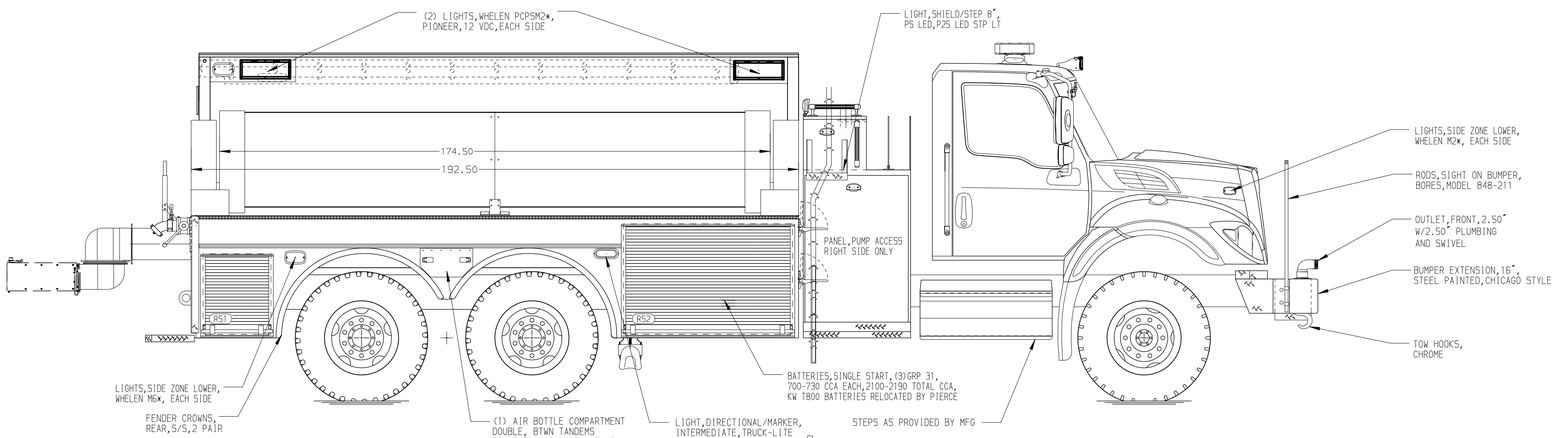

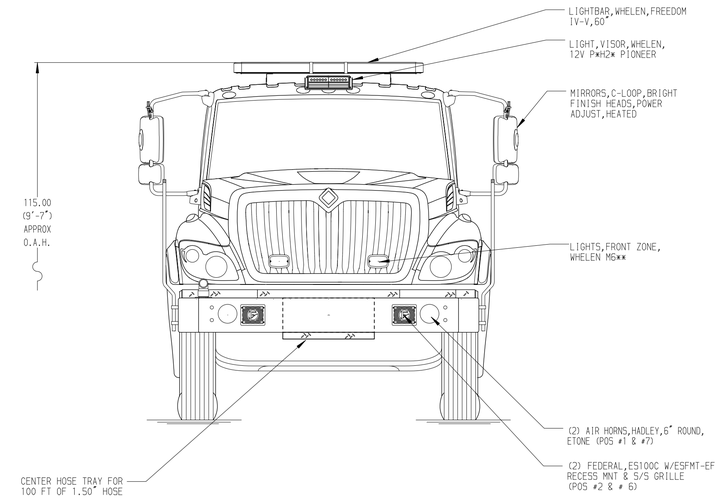

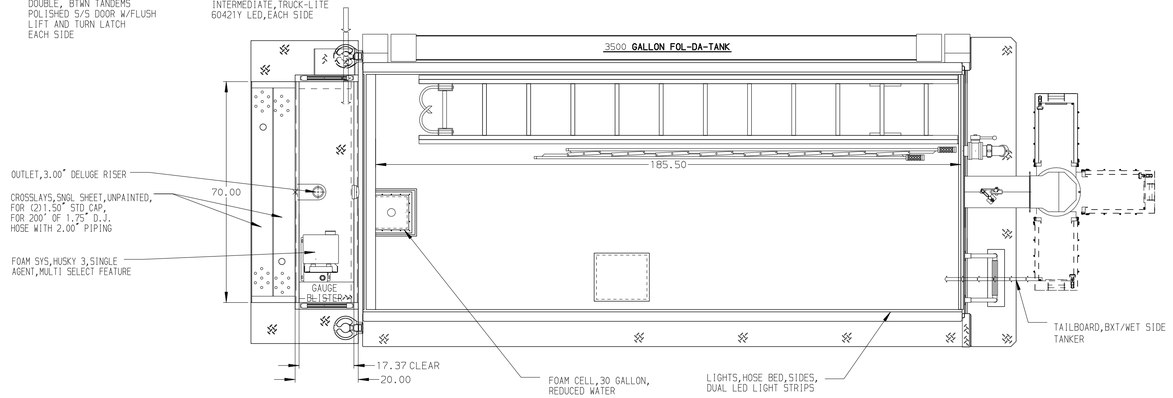

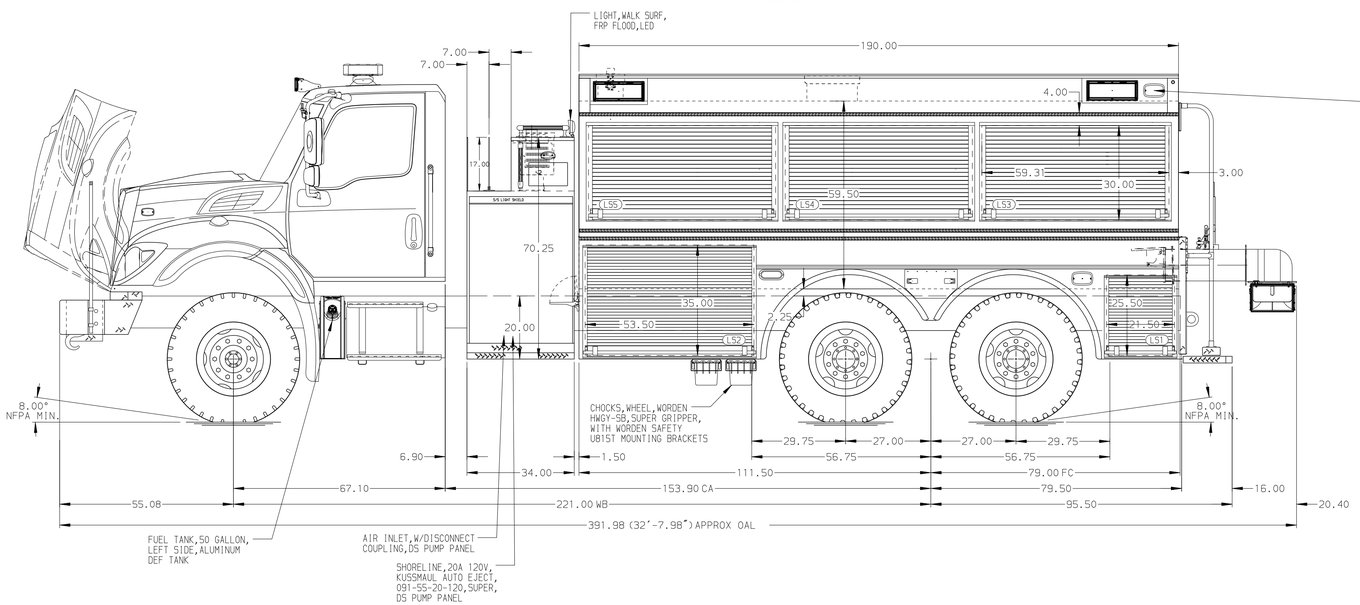

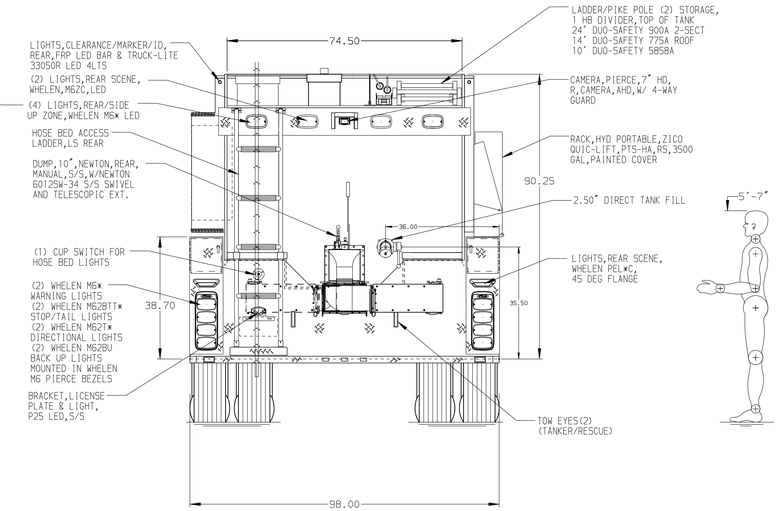

NOTE

DIMENSIONS SHOWN ARE APPROXIMATE AND ARE SUBJECT TO MINOR DEVIATIONS AS MAY OCCUR OR BE NECESSARY IN CONSTRUCTION.
MINOR DETAILS NOT SHOWN.

REV	DATE	BY	CH
7	17MAY24	RWR	JAP
6	05FEB24	RWR	AJA

CHASSIS DATA	
MAKE	IHC
MODEL	HV607

Pierce MANUFACTURING INC.

TITLE	1250-D-3000 POLY,2970W 30F,WETSIDE TANKER 34" SIDE CONTROL,(2) 1.50" CROSSLAYS
FOR	PIERCE FIELD UNIT APPLETON, WISCONSIN
DWG NO.	41182AD

JOB NO.	41182
SCALE	1:24
DATE	
DRAWN BY	RWR 01DEC23
CHECKED BY	AJA 01DEC23
SHEET SIZE	D
SHEET NO.	1 OF 1

View File Created 20-MAY-2024 13:53:53