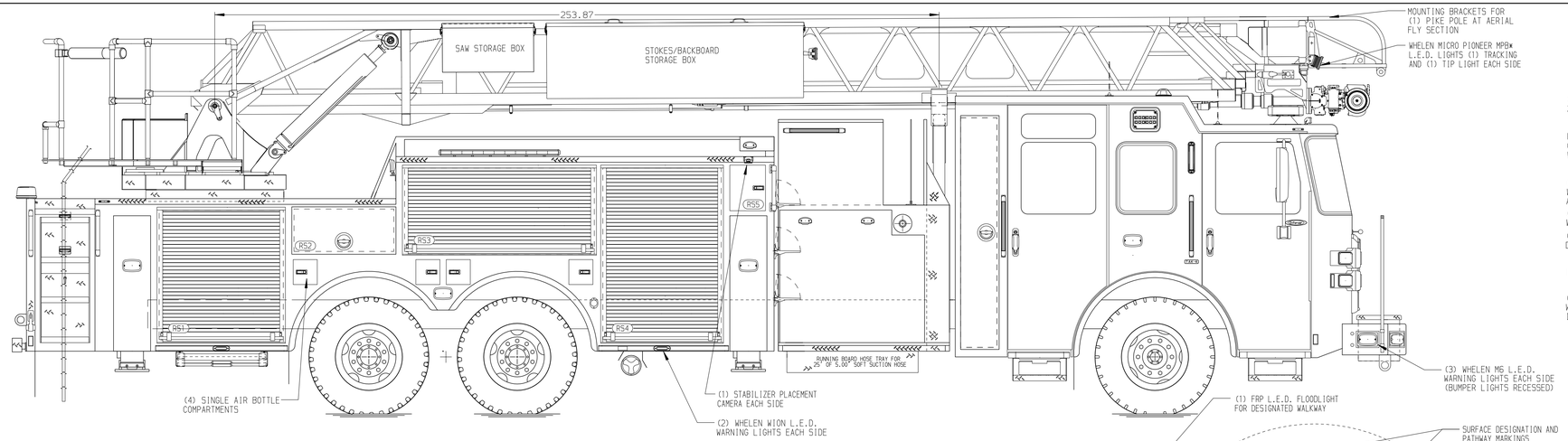

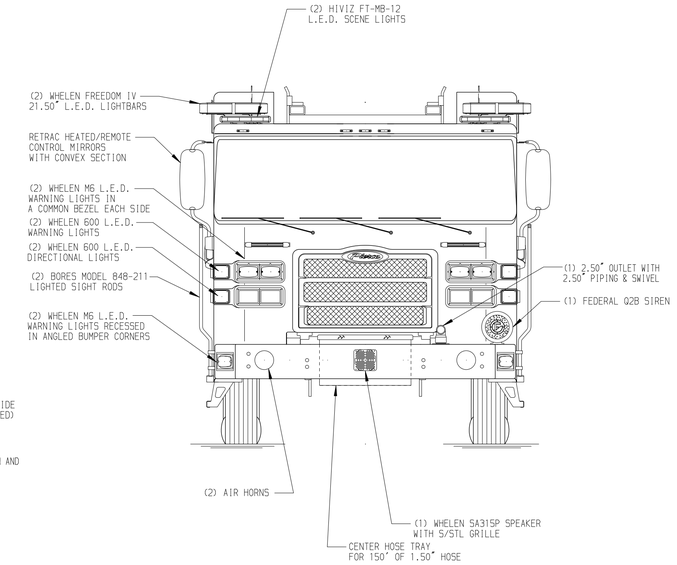

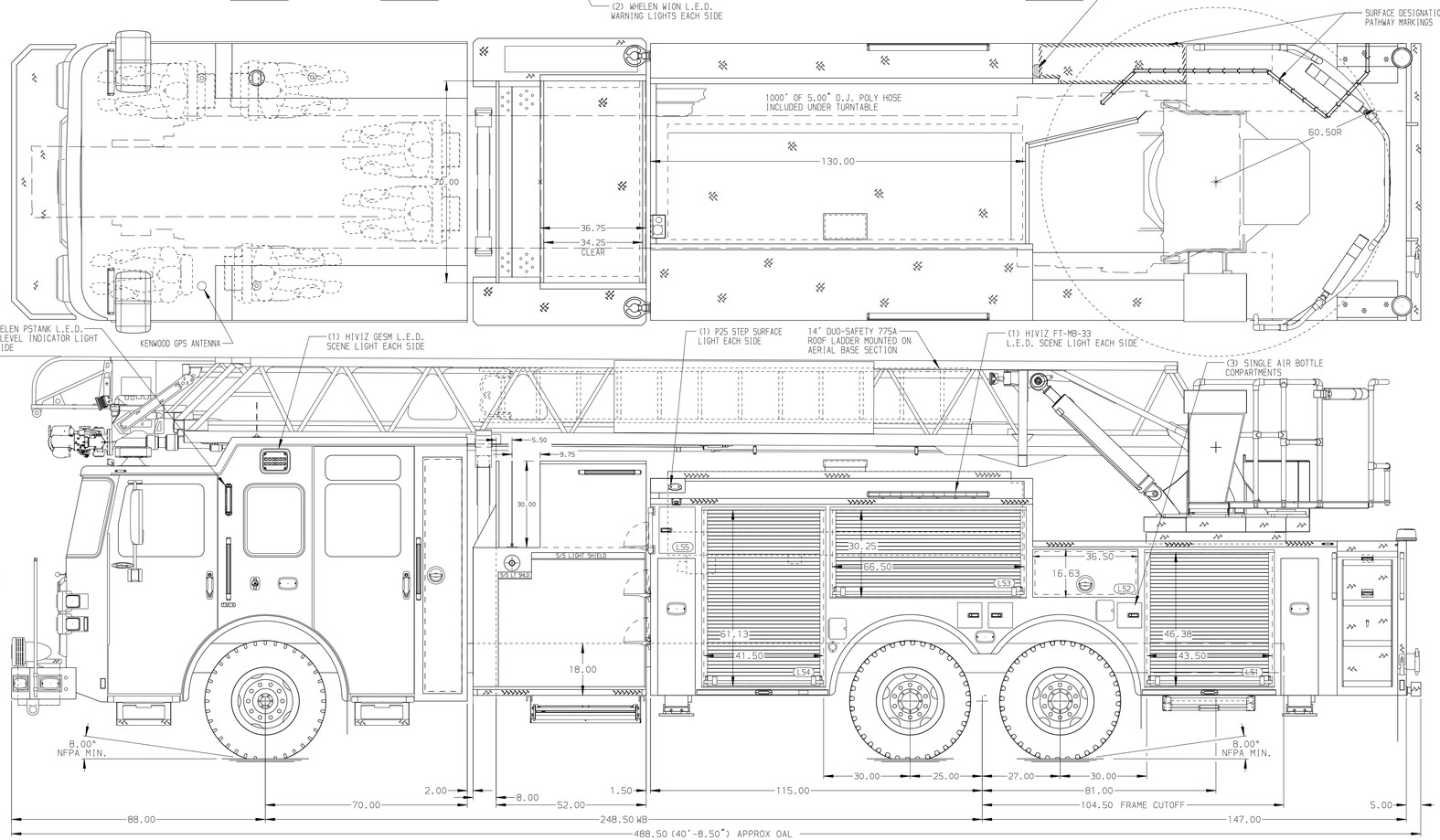

BODY	WATER TANK
107' ASL Tandem Axle Aluminum Body	500 Gallon Notched Poly Water Tank
COMPT,LEFT SIDE FRONT	**Foam System**
FH/FD Rollup Forward w/o Chute	Foam System Not Required
COMPT,LEFT SIDE REAR	**Foam Cell**
FH/FD Rollup and Lift-up Rearward	Foam Cell Not Required
COMPT,RIGHT SIDE FRONT	
Full Height Rollup Forward	
COMPT,RIGHT SIDE REAR	
Full Height Rollup and Lift-up Rearward	

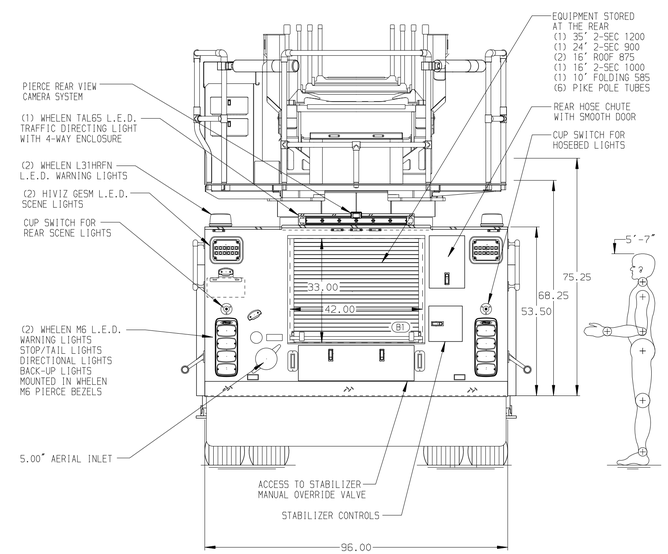

CHASSIS	CAB	AXLE,FRONT,CUSTOM	TRANSMISSION	PUMPHOUSE	CROSSLAYS,1.50"	SPEEDLAYS
Enforcer Chassis	7010 Notched Enforcer Cab	22,800 Lb TAK-4 Axle	ALLison 6th Gen, 4000 EVS P	52" Control Zone Side Mount	(1) 1.50" Standard Capacity Single Stack	Speedlays Not Required
ENGINE	**BUMPER**	**AXLE,REAR**		**PUMP**	**CROSSLAYS,2.50"**	**GENERATOR**
500 HP Cummins X12 Engine	19" Extended Painted Steel	44,000 Lb Meritor Axle		2000 GPM Hale QMAX-200	(1) 2.50" Standard Capacity Single Stack	Generator Not Required

NOTE

DIMENSIONS SHOWN ARE APPROXIMATE AND ARE SUBJECT TO MINOR DEVIATIONS AS MAY OCCUR OR BE NECESSARY IN CONSTRUCTION.
MINOR DETAILS NOT SHOWN.

1. NO LIMITED RETRACTION REQUIRED
2. ONE 1.50 OUTLET WITH 2.00 PIPING AND SWIVEL LOCATED IN CENTER BUMPER TRAY
3. SHORELINE RECEPTACLE WITH KUSSMAUL SUPER AUTO-EJECT LOCATED IN DRIVER SIDE STEP WELL
4. RECESSED AIR INLET WITH KUSSMAUL AIR EJECT & WEATHERPROOF COVER LOCATED ABOVE DRIVER SIDE FRONT WHEEL
5. BATTERY CHARGER LOCATED BEHIND DRIVER SEAT
6. BATTERY CHARGE INDICATOR LOCATED ON THE DRIVER SIDE SEAT RISER
7. FIVE ADJUSTABLE SHELVES LOCATED IN COMPARTMENTS PER ORDER
8. FOUR FLOOR MOUNTED SLIDE-OUT TRAYS LOCATED IN COMPARTMENTS PER ORDER
9. TWO SLIDE-OUT TRAYS LOCATED IN COMPARTMENTS PER ORDER
10. THREE ALUMINUM SWING-OUT TOOLBOARDS LOCATED IN COMPARTMENTS PER ORDER
11. FIVE RECEPTACLES LOCATED PER ORDER
12. TWO BACK WALL MOUNTED PEGBOARDS LOCATED IN COMPARTMENTS PER ORDER
13. ONE HOSE STORAGE RACK LOCATED IN COMPARTMENT PER ORDER
14. FIRE RESEARCH 2-WAY INTERCOM
15. 1500 GPM HIGH FLOW WATERWAY
16. 3.00" RAISED AERIAL PEDESTAL
17. LIFTING EYE ROPE RESCUE ATTACHMENT AT AERIAL TIP
18. TECNIQ RUNG LIGHTING AT AERIAL DEVICE

REV	DATE	BY	CH
E	25JUL24	ANZ	COS
D	11JUL24	ANZ	COS
C	09JUL24	ANZ	COS
B	03MAY24	ANZ	COS
A	30APR24	ANZ	COS

CHASSIS DATA — MAKE: PIERCE — MODEL: ENFORCER

Pierce MANUFACTURING INC.

TITLE: 107' ASCENDANT AERIAL LADDER AND BODY ASSEMBLY
500 GALLON WATER TANK

FOR: CRESCENT HOSE CO.
NORTH EAST, PA

DWG NO.: 40616AD

JOB NO.	SCALE	DRAWN BY	CHECKED BY	SHEET SIZE	SHEET NO.
40616	1:24	ANZ	NAK	D	1 OF 1

DATE: 15FEB24
DATE: 26FEB24

View File Created 25-JUL-2024 14:37:47