PUMPER

BODY
Medium Aluminum 2nd Gen Pumper

CHASSIS
Enforcer Chassis

CHASSIS

AXLE, FRONT, CUSTOM
18,000 lb Dana Axle

AXLE, REAR
27,000 lb Dana Axle

ENGINE
400 HP Cummins L9 Engine

TRANSMISSION
Allison 6th Gen, 3000 EVS PR

BUMPER
19" Extended Painted Steel

CAB
7010 Enforcer Cab

BODY

WATER TANK
750 Gallon New York Style Water Tank

COMPT, PUMPER, REAR
23.50" FF Lap Rear Compt

COMPT, PUMPER, LEFT SIDE
152" Rollup Full Height & Depth Front & Rear
Cleveland Notch 12"

COMPT, PUMPER, RIGHT SIDE
152" Rollup Full Height Front & Rear FDLER

FIRE SUPPRESSION

PUMPHOUSE
45" Control Zone Side Mount

PUMP
1500 GPM Hale QMAX

CROSSLAYS, 1.50"
(1) 1.50" Standard Capacity

CROSSLAYS, 2.50"
(1) 2.50" Standard Capacity

SPEEDLAYS
Speedlays Not Required

GENERATOR
Generator Not Required

Foam System
Foam System Not Required

Foam Cell
Foam Cell Not Required

Side Roll and Frontal Impact Protection

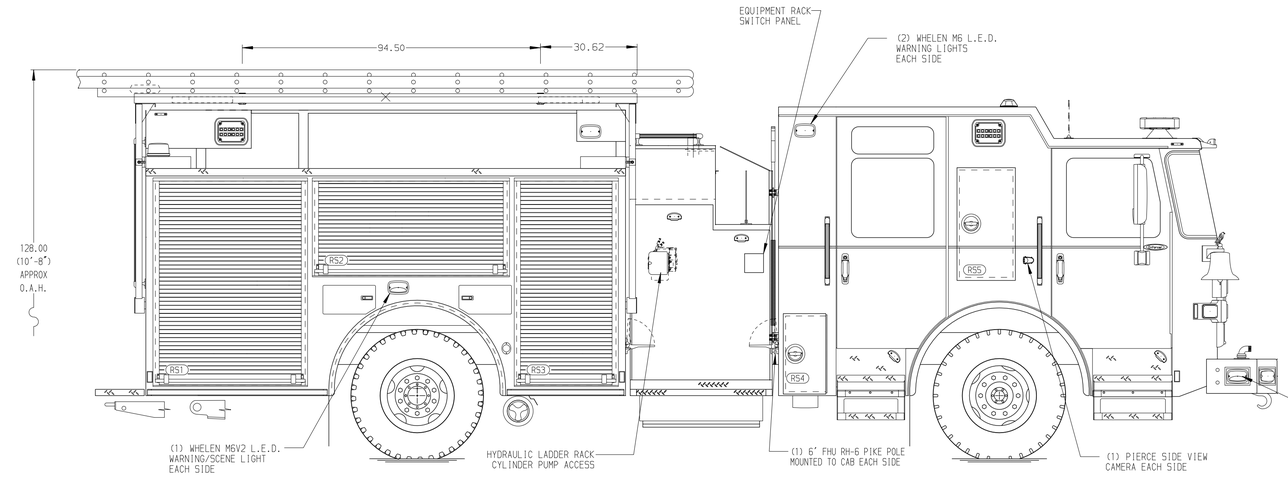

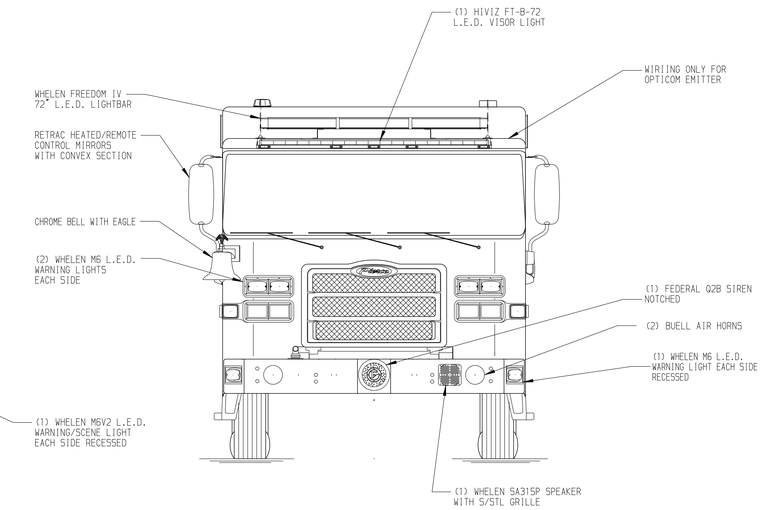

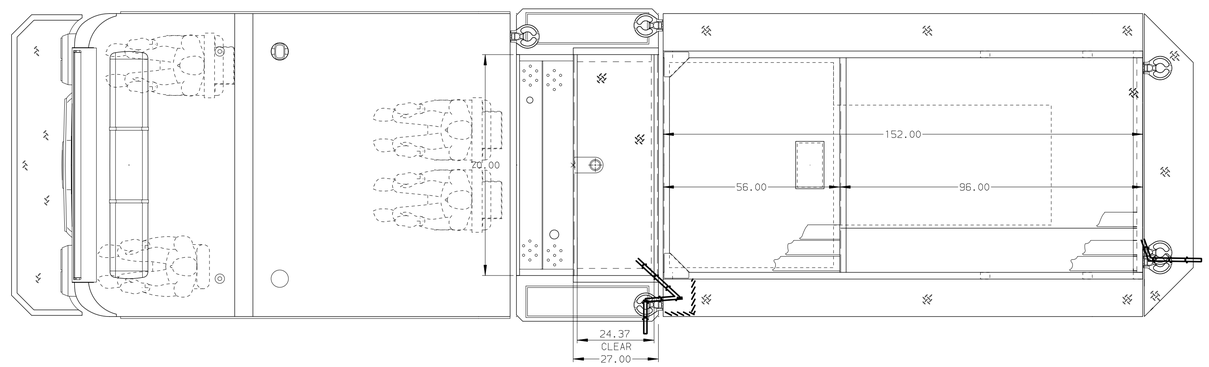

HOSEBED CAPACITY

BED 1
600' OF 2.50" D.J. POLY HOSE

BED 2
500' OF 2.50" D.J. POLY HOSE

BED 3
800' OF 5.00" D.J. POLY HOSE

BED 4
700' OF 2.50" D.J. POLY HOSE

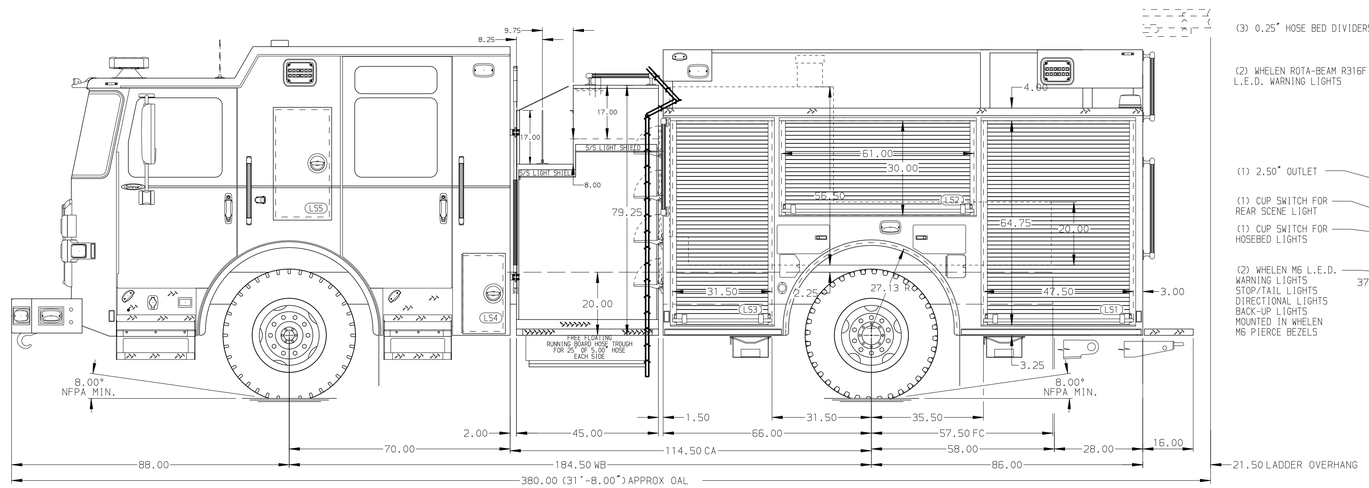

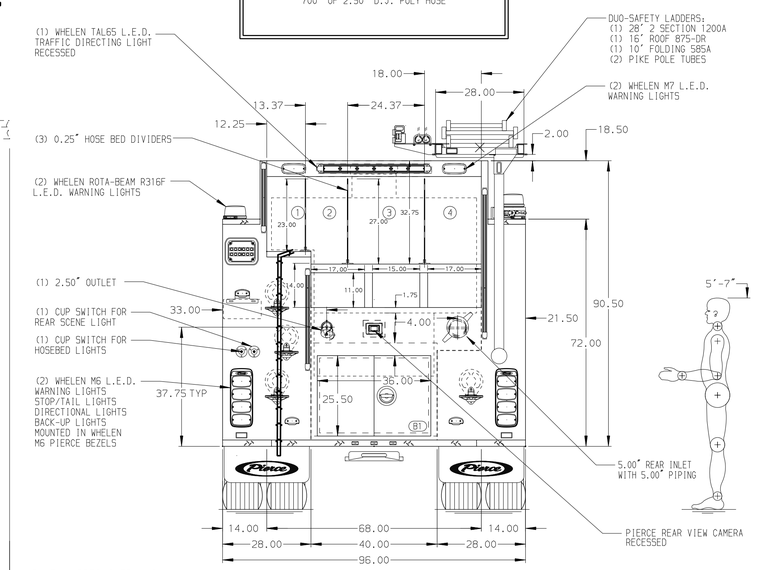

NOTE

DIMENSIONS SHOWN ARE APPROXIMATE AND ARE SUBJECT TO MINOR DEVIATIONS AS MAY OCCUR OR BE NECESSARY IN CONSTRUCTION.
MINOR DETAILS NOT SHOWN.

1. ONE 1.50 OUTLET WITH 2.00 PIPING AND SWIVEL LOCATED ON TOP BUMPER RIGHT SIDE
2. SHORELINE RECEPTACLE WITH KUSSMAUL SUPER AUTO-EJECT LOCATED DRIVER SIDE STEPWELL
3. AIR INLET WITH DISCONNECT COUPLING IN THE DRIVER SIDE STEPWELL
4. BATTERY CHARGER LOCATED PER ORDER
5. BATTERY CHARGE INDICATOR LOCATED ON THE DRIVER'S STEPWELL
6. EIGHT ADJUSTABLE SHELVES LOCATED PER ORDER
7. ONE ADJUSTABLE TILT/ SLIDE-OUT TRAY LOCATED PER ORDER
8. ONE SWING-OUT TOOLBOARD LOCATED PER ORDER
9. PARTITION BETWEEN LS1/B1 AND RS1/B1

REV	DATE	BY	CH
3	23JUL24	LST	JLL
2	24APR24	LST	JLL
1	29FEB24	LST	JLL

CHASSIS DATA	
MAKE	PIERCE
MODEL	ENFORCER
TITLE	Pierce Pumper Approval Drawing -
FOR	City of Naperville Fire Department -
DWG NO.	39877AD

Pierce MANUFACTURING INC.

JOB NO.	39877
SCALE	1:24
DATE	
DRAWN BY	LST 04JAN24
CHECKED BY	AMI 08JAN24
SHEET SIZE	D
SHEET NO.	1 OF 1

View File Created 23-JUL-2024 09:33:35