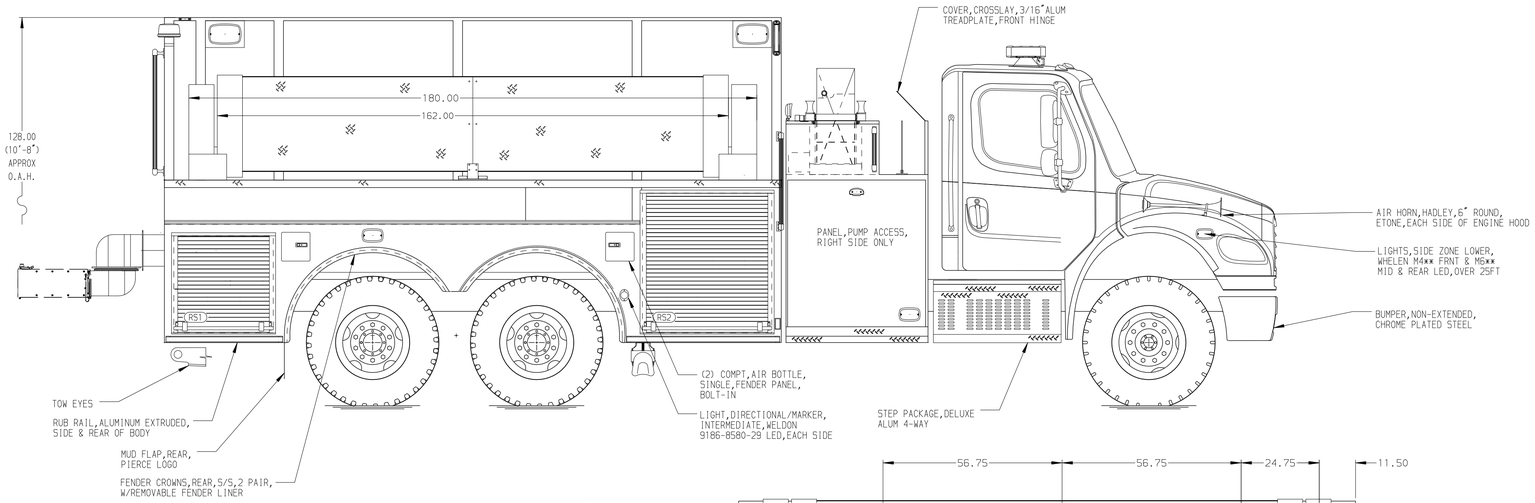

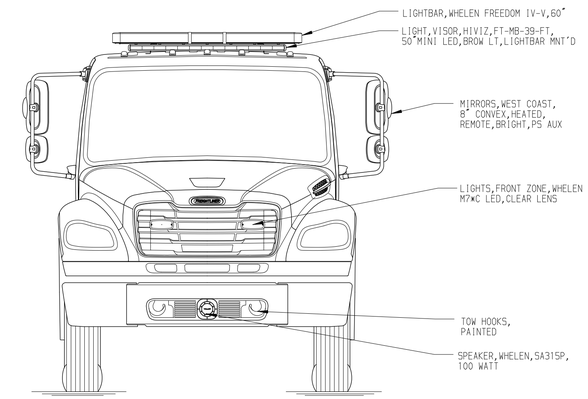

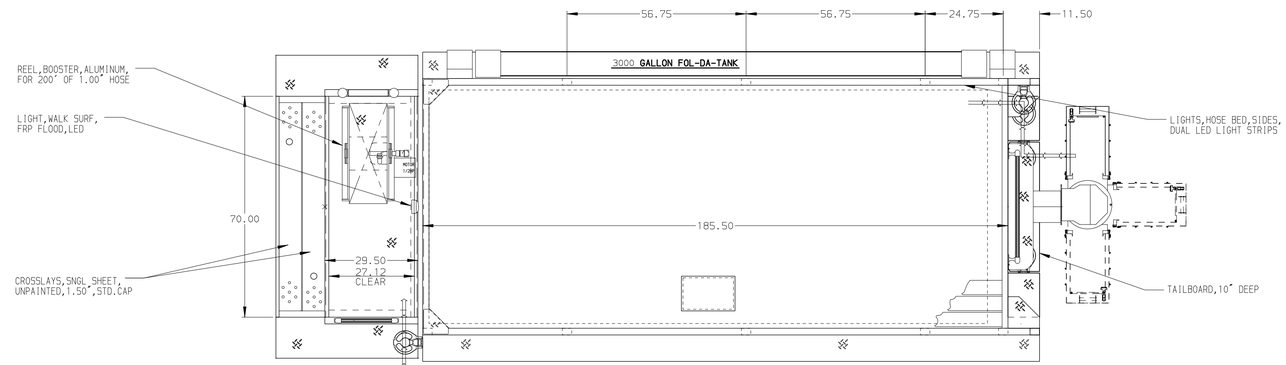

HOSEBED CAPACITIES

1. 200' OF 2.50" D.J. HOSE
2. 1000' OF 5.00" L.D. HOSE
3. 400' OF 3.00" D.J. HOSE

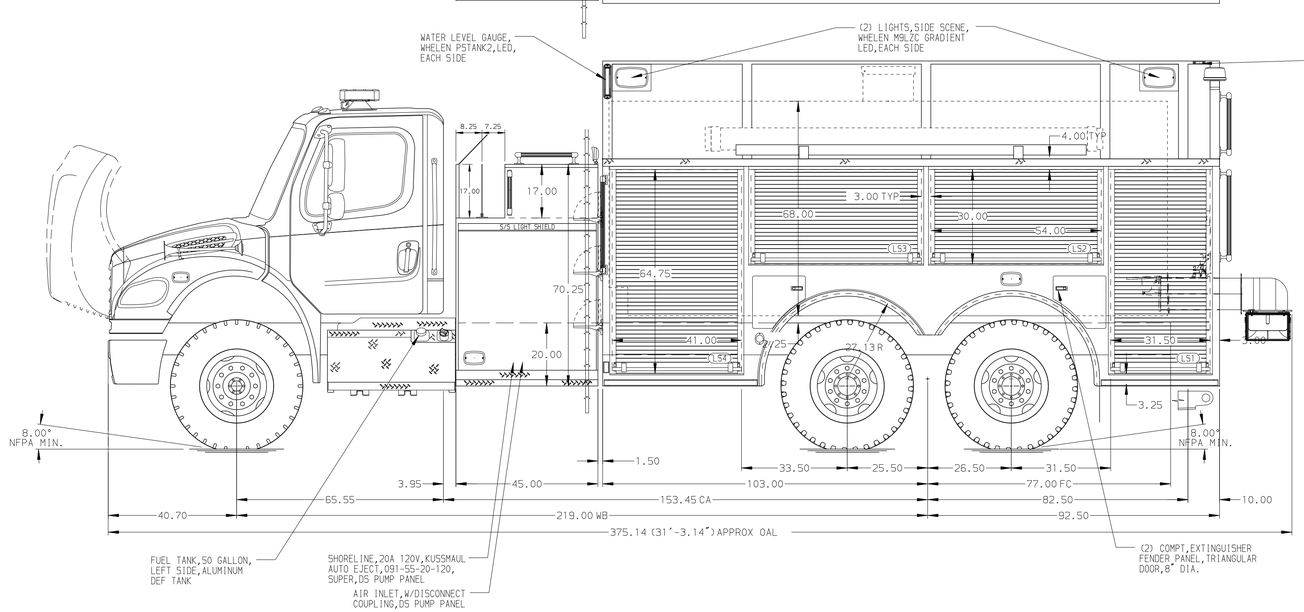

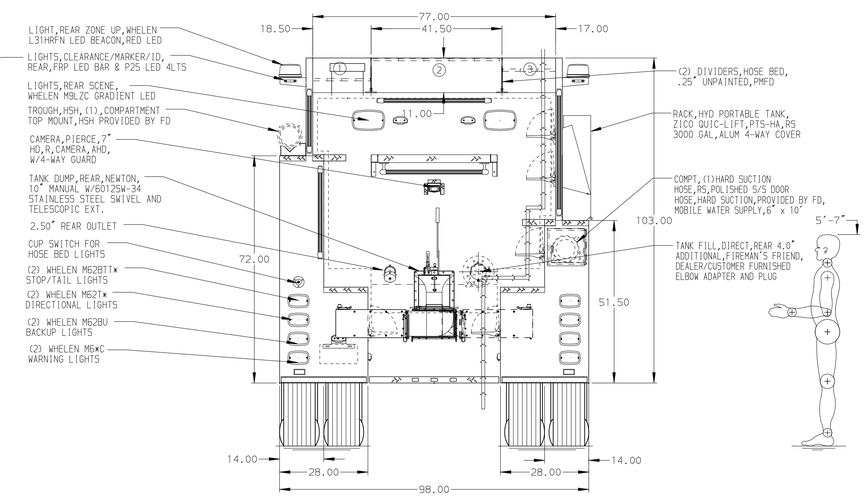

NOTE

DIMENSIONS SHOWN ARE APPROXIMATE AND ARE SUBJECT TO MINOR DEVIATIONS AS MAY OCCUR OR BE NECESSARY IN CONSTRUCTION.
MINOR DETAILS NOT SHOWN.

REV	DATE	BY	CH
3	14JUN24	VHO	CCS
2	24APR24	RWR	CCS
1	27FEB24	RWR	AJA

CHASSIS DATA
MAKE: FL
MODEL: M2-106 PLUS

Pierce MANUFACTURING INC.

TITLE: 1250-D-3000,195" 2G DRYSIDE,LS FULL HGHT RS 3/4 HGHT 45" SIDE CONTROL,(2) 1.50" CROSSLAYS

FOR: TEN-8 FIRE & SAFETY, BRADENTON, FLORIDA

DWG NO.: 39460AD

JOB NO.	39460
SCALE	1:24
DATE	
DRAWN BY	RWR
DATE	15DEC23
CHECKED BY	AJA
DATE	18DEC23
SHEET SIZE	D
SHEET NO.	1 OF 1

View File Created 17-JUN-2024 07:23:57