RIGHT SIDE COMPARTMENTS CONTAIN THE FOLLOWING:

COMPARTMENT RS1 CONTAINS:
- (1) VERTICAL PEGBOARD DIVIDER
- (2) STD DEPTH ON-SCENE SLIDE OUT TRAYS
- (1) STD DEPTH ON-SCENE SLIDE OUT TILT TRAY
- (1) 15/20A,120V DUPLEX RECEPTACLE
- (1) TURNTABLE STYLE HYD TOOL MOUNT ON SLIDE OUT TRAY
- PEGBOARD ON SIDE AND REAR WALLS

COMPARTMENT RS2 CONTAINS:
- (1) VERTICAL COMPARTMENT DIVIDER
-

COMPARTMENT RS3 CONTAINS:
- (1) STD DEPTH ON-SCENE SLIDE OUT TILT TRAY
-

COMPARTMENT RS4 CONTAINS:
- (1) CASCADE SYSTEM CONTROL PANEL
- (1) "SPACESAVER"2-BOTTLE FILL ENCLOSURE
- (1) LOW PRESSURE AIR REEL W/200' OF HOSE
- (1) VERTICAL COMPARTMENT DIVIDER
-

COMPARTMENT RS5 CONTAINS:
- (1) VERTICAL PEGBOARD DIVIDER
- PEGBOARD ON END OF CASCADE BOTTLES
- (1) BREATHING AIR BOOSTER PUMP
- (2) STD DEPTH ON-SCENE SLIDE OUT TRAYS
- (1) LOW PROFILE ELECTRIC CORD REEL WITH 200' OF 10/4 YELLOW CORD
- (4) 15/20A,120V DUPLEX RECEPTACLES
- (4) 6000 LN AIR STORAGE BOTTLES
- (1) STD DEPTH ON-SCENE SLIDE OUT TILT TRAY
- POLY LINING ON COMPARTMENT FLOOR
- (1) HORIZONTAL FLOOR EXTENSION
-
-

COMPARTMENT RS6 CONTAINS:
- (2) 2-WAY ADJ SHELVES WITH POLY LINING
- (1) 2-WAY ON-SCENE SLIDE OUT TRAY
- POLY LINING ON COMPARTMENT FLOOR
- (1) 50A,250V RECEPTACLE
- (1) CAB LIFT CONTROLLER

COMPARTMENT RS7 CONTAINS:
- CHASSIS BATTERIES
-

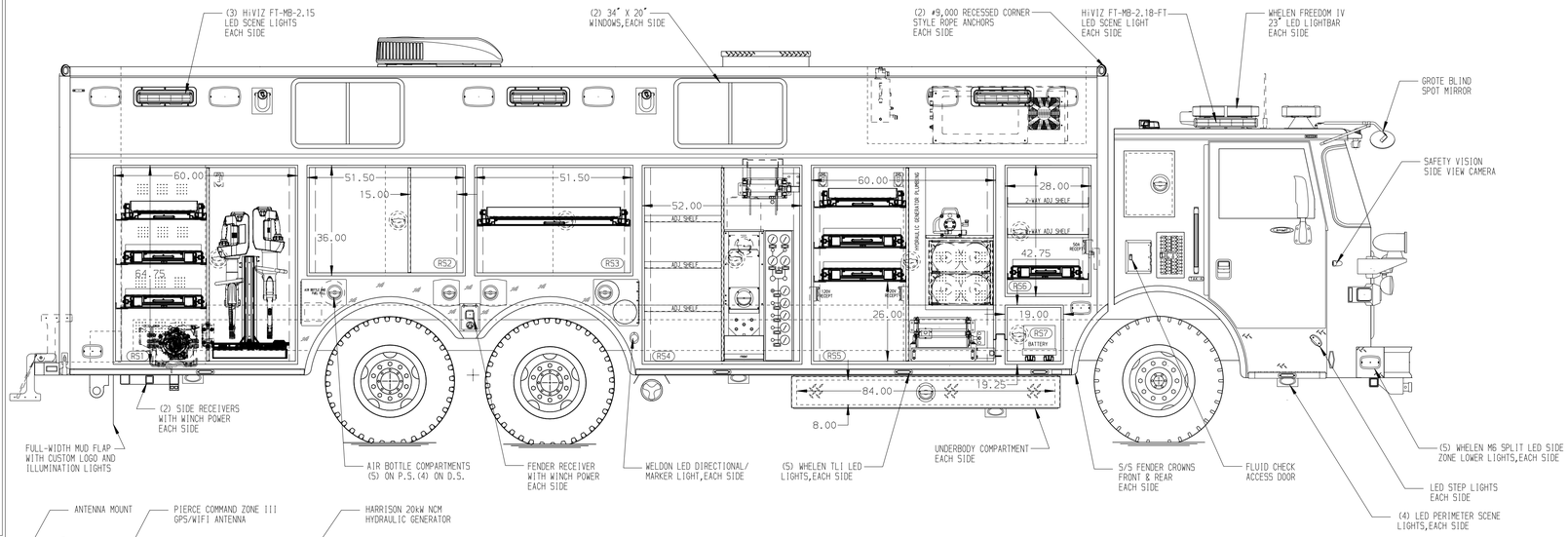

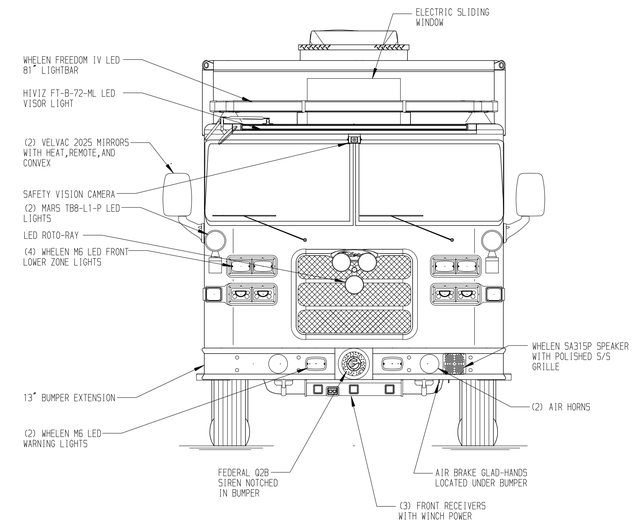

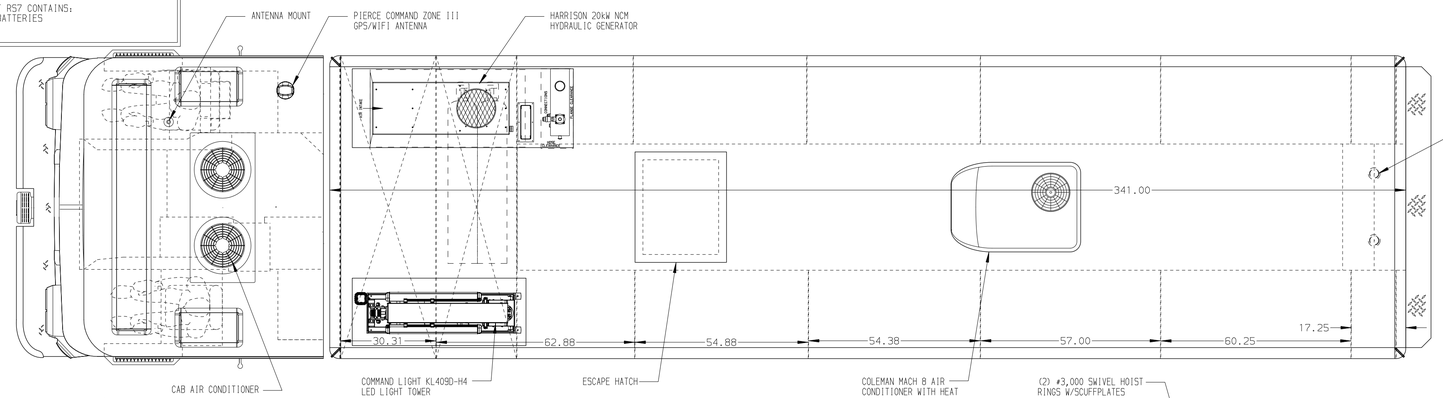

LEFT SIDE COMPARTMENTS CONTAIN THE FOLLOWING:

COMPARTMENT LS1 CONTAINS:
- (2) 15/20A,120V DUPLEX RECEPTACLES
- (1) 30A,240V T.L. RECEPTACLE
- (1) MOUNTING BRACKET FOR HYD POWER UNIT
- (1) TURNTABLE STYLE HYD TOOL MOUNT ON SLIDE OUT TRAY
- PEGBOARD ON SIDE AND REAR WALLS
- MOUNTING PROVISIONS FOR FUTURE REELS(EF2016-17-18)
-

COMPARTMENT LS2 CONTAINS:
- (1) VERTICAL COMPARTMENT DIVIDER
- (2) ADJUSTABLE SHELVES WITH 1" LIPS
- (3) ALUMINUM TOOL BOXES
- (1) FLAT TOP ADJUSTABLE SHELF

COMPARTMENT LS3 CONTAINS:
- (1) STD DEPTH ON-SCENE SLIDE OUT TILT TRAY
-

COMPARTMENT LS4 CONTAINS:
- (1) VERTICAL PEGBOARD DIVIDER
- PEGBOARD ON REAR AND RIGHT WALL OF COMPARTMENT
- (2) STD DEPTH ADJ SHELVES
- (1) STD DEPTH ON-SCENE SLIDE OUT TILT TRAY
- (1) STD DEPTH FLOOR MTD ON-SCENE TRAYS
- (2) STD DEPTH ADJ SLIDE OUT TOOLBOARDS
-

COMPARTMENT LS5 CONTAINS:
- (1) 5-DRAWER C-TECH CABINET
- (1) VERTICAL PEGBOARD DIVIDER
- (1) HORIZONTAL FLOOR EXTENSION
- PEGBOARD ON RIGHT SIDE WALL OF COMPARTMENT AND END OF CASCADE BOTTLES
- (1) STD DEPTH ON-SCENE SLIDE OUT TRAY
- (1) STD DEPTH ON-SCENE SLIDE OUT TILT TRAY
- (1) CIRCUIT BREAKER PANEL
- (1) GENERATOR METER PANEL
- (1) SUB FEED BOX
- (1) COMMAND LIGHT CONTROLLER
- (1) LOW PROFILE ELECTRIC CORD REEL WITH 200' OF 10/4 YELLOW CORD
- (4) 6000 LN AIR STORAGE BOTTLES
- POLY LINING ON COMPARTMENT FLOOR AFT OF DIVIDER
-

COMPARTMENT LS6 CONTAINS:
- (2) 2-WAY ADJ SHELVES WITH POLY LINING
- (1) 2-WAY ON-SCENE SLIDE OUT TRAY
- (1) 50A,250V RECEPTACLE
- POLY LINING ON COMPARTMENT FLOOR

COMPARTMENT LS7 CONTAINS:
- CHASSIS BATTERIES
-

REAR COMPARTMENT CONTAINS THE FOLLOWING:

COMPARTMENT B1 CONTAINS:
- (2) SPECIAL DEPTH ADJ SHELVES
- (1) 15/20A,120V DUPLEX RECEPTACLE
- PEGBOARD ON SIDE AND REAR WALLS
-

COMPARTMENT B2 CONTAINS:
- (2) SPECIAL DEPTH ADJ SHELVES
- PEGBOARD ON SIDE AND REAR WALLS
-
-

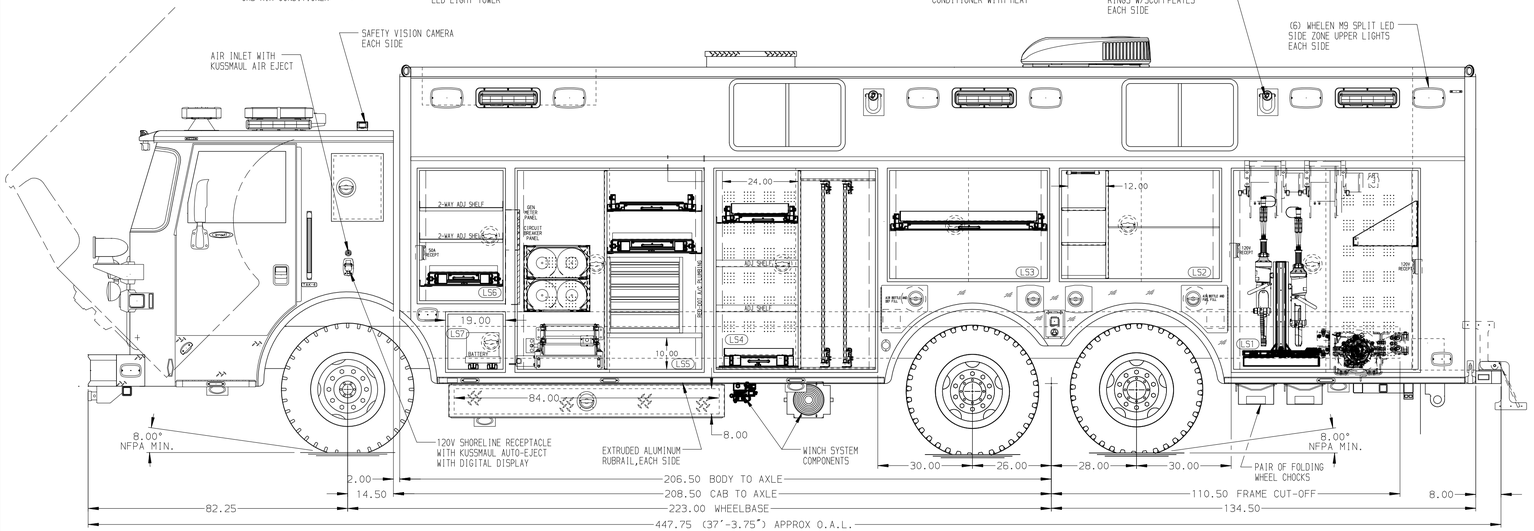

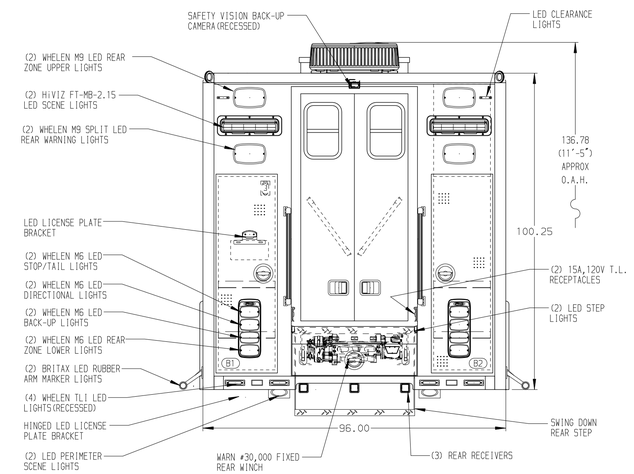

NOTE

DIMENSIONS SHOWN ARE APPROXIMATE AND ARE SUBJECT TO MINOR DEVIATIONS AS MAY OCCUR OR BE NECESSARY IN CONSTRUCTION.
MINOR DETAILS NOT SHOWN.

NOTES:
1. 15/20A,120V DUPLEX RECEPTACLE CENTERED ON REAR WALL OF CAB
2. POLISHED S/S SCUFFPLATES ON CAB DOOR JAMBS
3. FLOOR IN CAB TO BE ALUMINUM TREADPLATE
4. (2) #9,000 RECEIVER STYLE ROPE ANCHORS
5. BRUSHED S/S ON BODY FENDER PANELS
6. BRUSHED S/S SCUFFPLATES ON BOTTOM OF BODY DOOR FRAMES
7. PIERCE LED LIGHT STRIPS IN ALL BODY COMPARTMENTS
8. KUSSMAUL 40 AMP BATTERY CHARGER LOCATED BEHIND DRIVER'S SEAT

FRONTAL IMPACT PROTECTION

MAXIMUM O.A.H. 11'-6"

NOTE:
LAP DOORS HAVE BEEN SHOWN IN HIDDEN LINES TO CLEARLY IDENTIFY THE EQUIPMENT IN EACH COMPARTMENT. DASHED LINES ON SIDES ARE DOORS IN OPEN POSITION

CLEAR DOOR WIDTH KEY	
AMDOR ROLL UP DOORS:	-2 1/4"
GORITTE ROLL UP DOORS:	-2 1/2
PIERCE DOUBLE LAP DOORS:	-4 1/4"
PIERCE LIFT-UP LAP DOORS:	-1 1/2"

(EX: 60"F-F - 2 1/4"= 57 3/4" CLEAR)
(F-F)= FRAME TO FRAME

REV	DATE	BY	CH	
7	17JAN25	DHE	CDK	CHASSIS DATA
6	21NOV24	DHE	CDK	
5	05AUG24	JGA	CDK	MAKE
4	13JUN24	DHE	CDK	PIERCE
3	11APR24	DHE	CDK	MODEL

MODEL: ARROW XT

Pierce MANUFACTURING INC.

		JOB NO.	39321
		SCALE 1:24	DATE
TITLE	HEAVY DUTY RESCUE WALKIN	DRAWN BY DHE	15MAR24
FOR	COMMISIONERS OF CAMBRIDGE BID #1170 ATLANTIC EMERGENCY SOLUTIONS INC. BRIAN BASHISTA	CHECKED BY CDK	18MAR24
DWG NO.	39321AD-SH1	SHEET SIZE D	SHEET NO. 1 OF 2

View File Created 25-FEB-2025 10:17:49