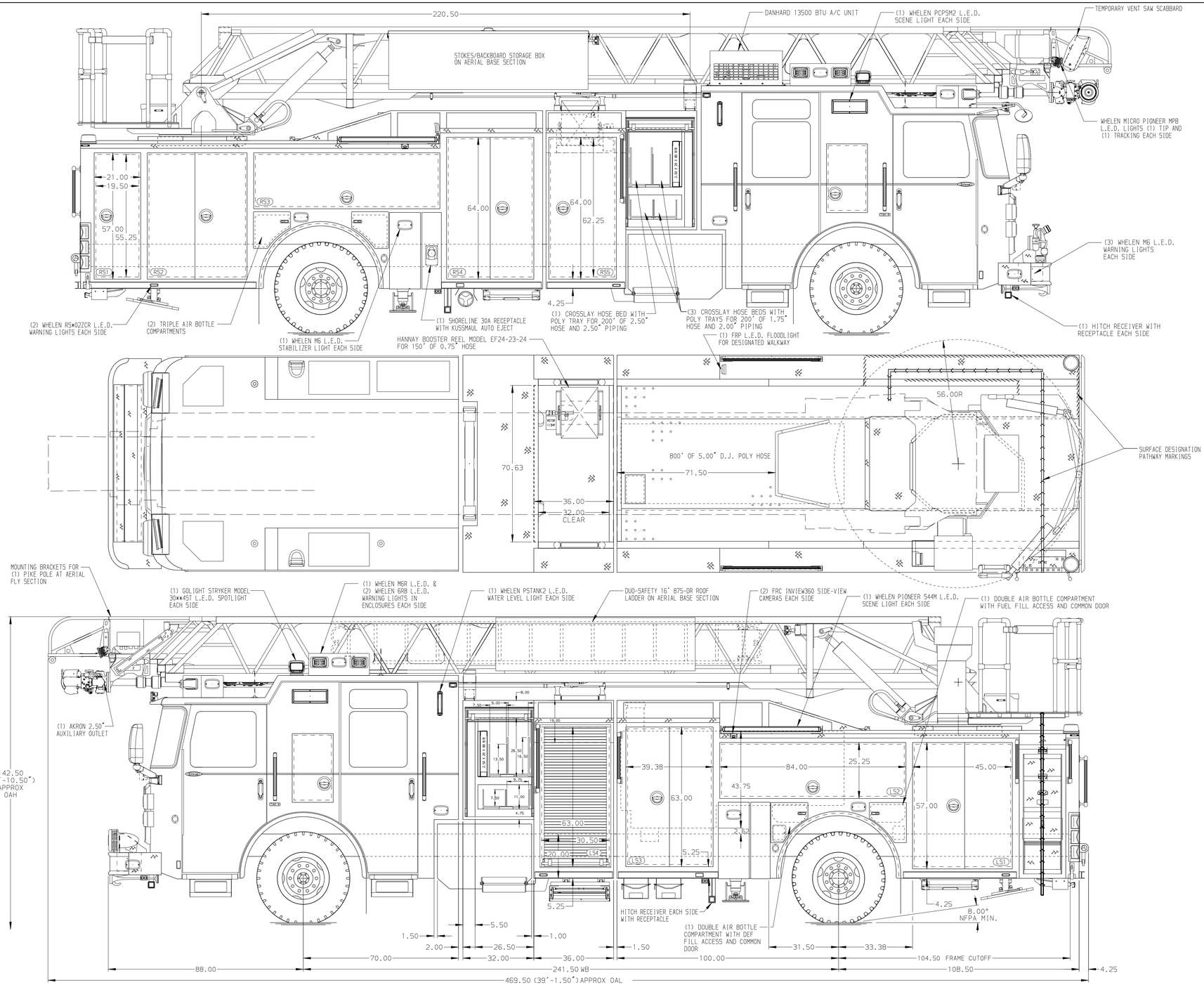

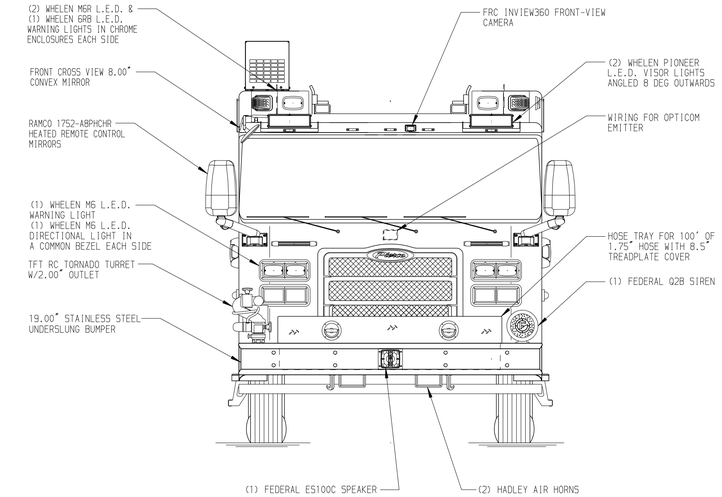

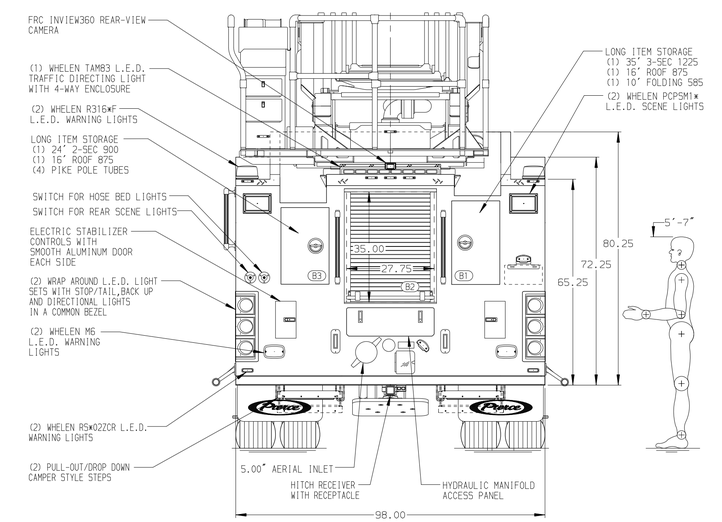

ALUMINUM BODY

NOTE

DIMENSIONS SHOWN ARE APPROXIMATE AND ARE SUBJECT TO MINOR DEVIATIONS AS MAY OCCUR OR BE NECESSARY IN CONSTRUCTION.
MINOR DETAILS NOT SHOWN.

1. LIMITED RETRACTION NOT REQUIRED
2. ONE AIR INLET/OUTLET WITH DISCONNECT FITTING & 1/4 TURN VALVE LOCATED ON PUMP PANEL EACH SIDE
3. BATTERY CHARGER LOCATED BEHIND DRIVERS SEAT
4. BATTERY CHARGE INDICATOR LOCATED ON DRIVER'S SEAT RISER
5. ONE 1.50" OUTLET WITH 2.00" PIPING AND SWIVEL LOCATED IN CENTER BUMPER TRAY
6. ELEVEN ADJUSTABLE SHELVES LOCATED IN COMPARTMENTS PER ORDER
7. FOUR FLOOR MOUNTED SLIDE-OUT TRAYS LOCATED IN COMPARTMENTS PER ORDER
8. TWO SLIDE-OUT TRAYS LOCATED IN COMPARTMENTS PER ORDER
9. ONE RECEPTACLE LOCATED PER ORDER
10. TWO RECEPTACLE STRIPS LOCATED PER ORDER
11. ONE ALUMINUM SWING-OUT TOOLBOARD LOCATED IN COMPARTMENT PER ORDER
12. TWO ALUMINUM SLIDE-OUT TOOLBOARDS LOCATED IN COMPARTMENTS PER ORDER
13. DUAL L.E.D. LIGHT STRIPS LOCATED IN COMPARTMENTS PER ORDER
14. ONE VERTICAL PARTITION LOCATED IN COMPARTMENT PER ORDER
15. ONE ALUMINUM TOOLBOARD ADDED TO SLIDE-OUT TRAY LOCATED PER ORDER
16. ONE ZICO AIR BOTTLE HOLDER MODEL UH-6-30-3-SF LOCATED IN COMPARTMENT PER ORDER
17. TECNIQ RUNG LIGHTING ON AERIAL LADDER
18. WARN ZEON 10-S KIT 10,000LB PORTABLE WINCH SHIPPED LOOSE
19. WIRING FOR OPTICOM EMITTER LOCATED PER ORDER
20. NON-RAISED AERIAL PEDESTAL
21. CAMERA AT AERIAL EGRESS
22. 1500 GPM HIGH FLOW WATERWAY

REV	DATE	BY	CH
7	12DEC24	ANZ	JLL
6	22AUG24	ANZ	JLL
5	03MAY24	ANZ	JBL
4	22MAR24	ANZ	BYO

CHASSIS DATA
MAKE: PIERCE
MODEL: ENFORCER

Pierce MANUFACTURING INC.

TITLE: 107' ASCENDANT AERIAL LADDER AND BODY ASSEMBLY 500 GALLON WATER TANK
FOR: EDMOND FIRE DEPARTMENT EDMOND, OK
DWG NO.: 39281AD

JOB NO.	39281
SCALE	1:24
DATE	
DRAWN BY	ANZ 04MAR24
CHECKED BY	BYO 13MAR24
SHEET SIZE	D
SHEET NO.	1 OF 1

View File Created 12-DEC-2024 10:53:12