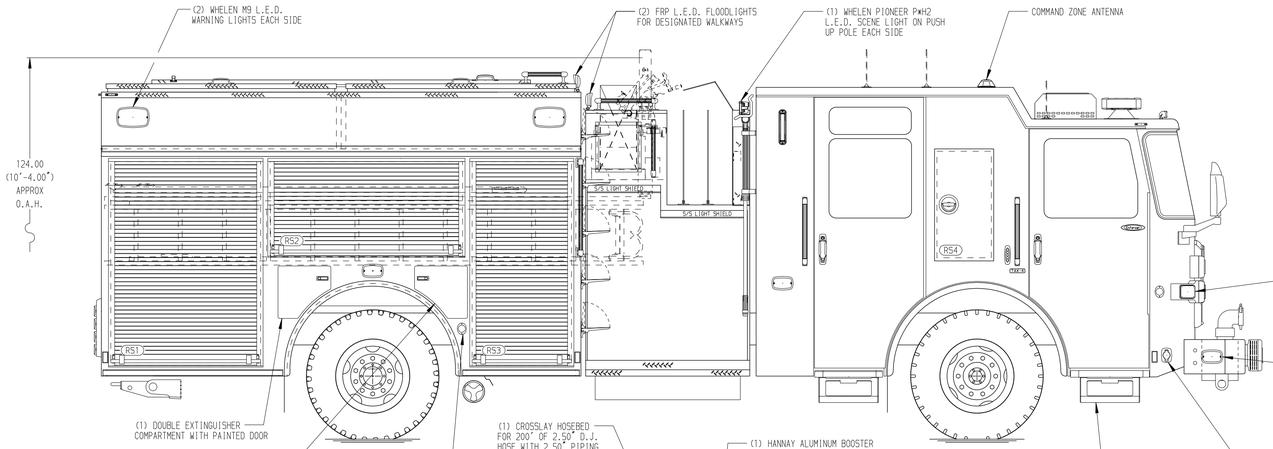

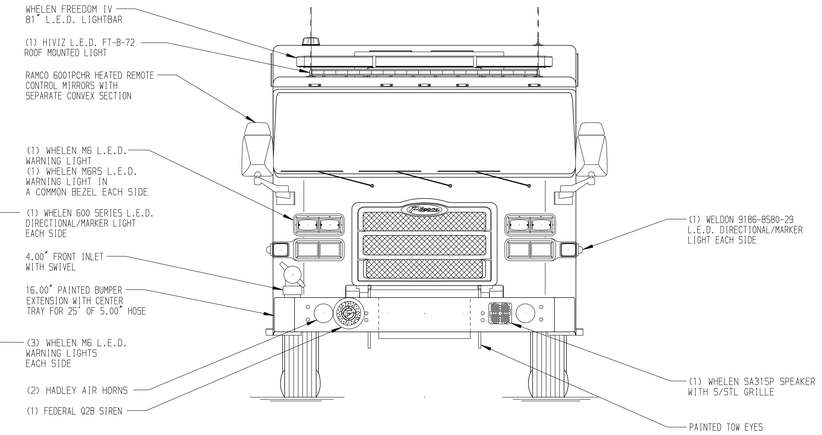

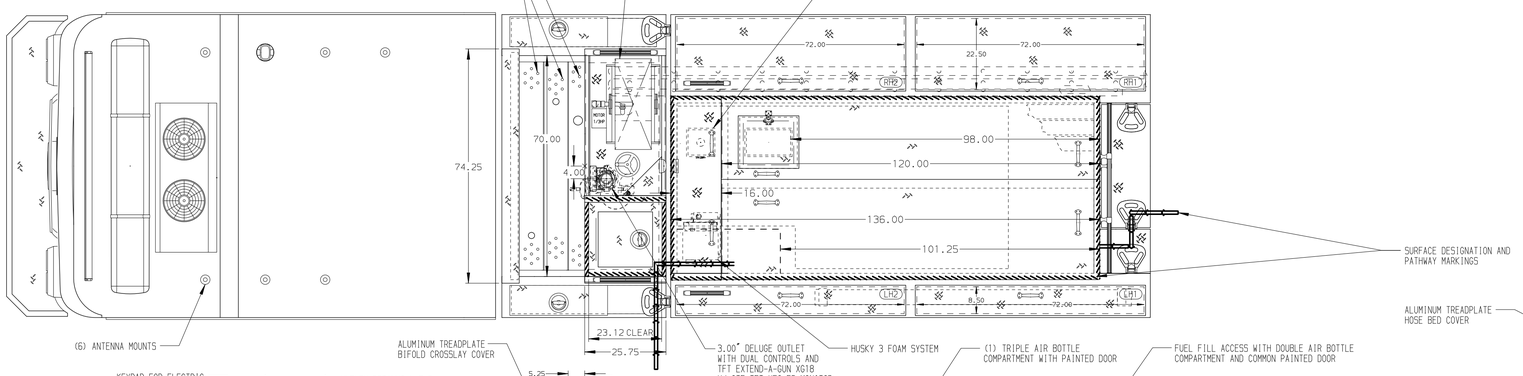

HOSEBED CAPACITIES
1. 1000' OF 2.50" D.J. POLY HOSE
2. (2) 100' BUNDLES OF 1.75" D.J. POLY HOSE
3. 1000' OF 4.00" D.J. POLY HOSE

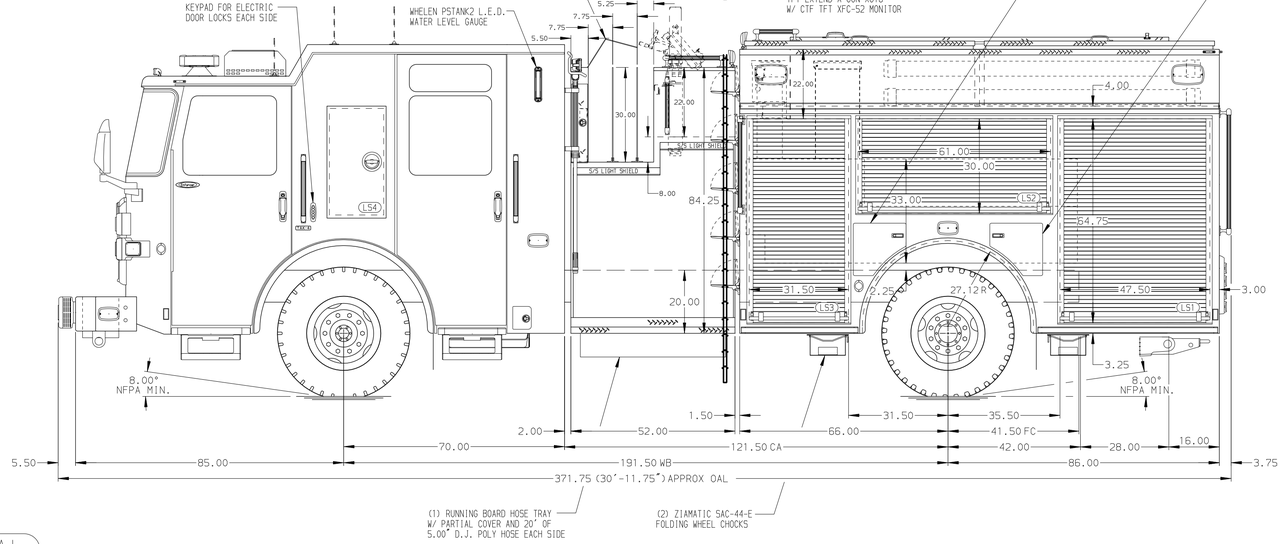

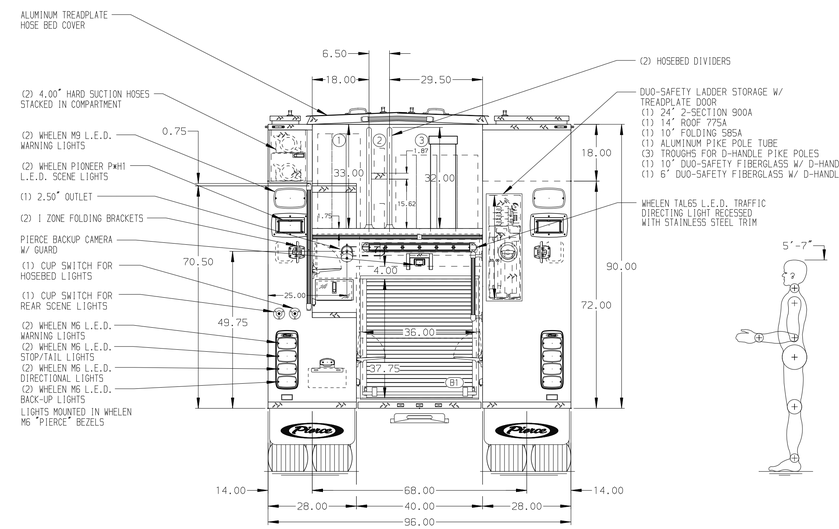

GALVANNEAL

NOTE
DIMENSIONS SHOWN ARE APPROXIMATE AND ARE SUBJECT TO MINOR DEVIATIONS AS MAY OCCUR OR BE NECESSARY IN CONSTRUCTION.
MINOR DETAILS NOT SHOWN.

1. PACCAR DEF TANK MOUNTED UNDER CAB ON THE DRIVER'S SIDE
2. BATTERY CHARGER LOCATED IN DRIVER SIDE HATCH COMPARTMENT
3. BATTERY CHARGER INDICATOR LOCATED ON DRIVER'S SEAT RISER
4. DUAL L.E.D. LIGHT STRIPS LOCATED IN HOSE BED
5. AIR INLET WITH DISCONNECT COUPLING LOCATED IN DRIVERS SIDE FRONT STEP WELL

REV	DATE	BY	CH
D	16MAY24	KLE	DTJ
C	10APR24	ARI	DTJ
B	05APR24	ARI	DTJ
A	12JAN24	ARI	WKL

CHASSIS DATA: MAKE PIERCE; MODEL ENFORCER

Pierce MANUFACTURING INC.

TITLE: 1500-D-530P, 500G WATER-30G FOAM, 152" PUMPER BODY (3) CROSSLAYS, RS LADDER STORAGE, HOSE REEL, DELUGE

FOR: CITY OF SAN GABRIEL, SAN GABRIEL, CALIFORNIA

DWG NO. 39026AD-SH1

JOB NO.	39026
SCALE 1:24	DATE
DRAWN BY ARI	08JAN24
CHECKED BY WKL	08JAN24
SHEET SIZE D	SHEET NO. 1 OF 1

View File Created 16-MAY-2024 12:00:46