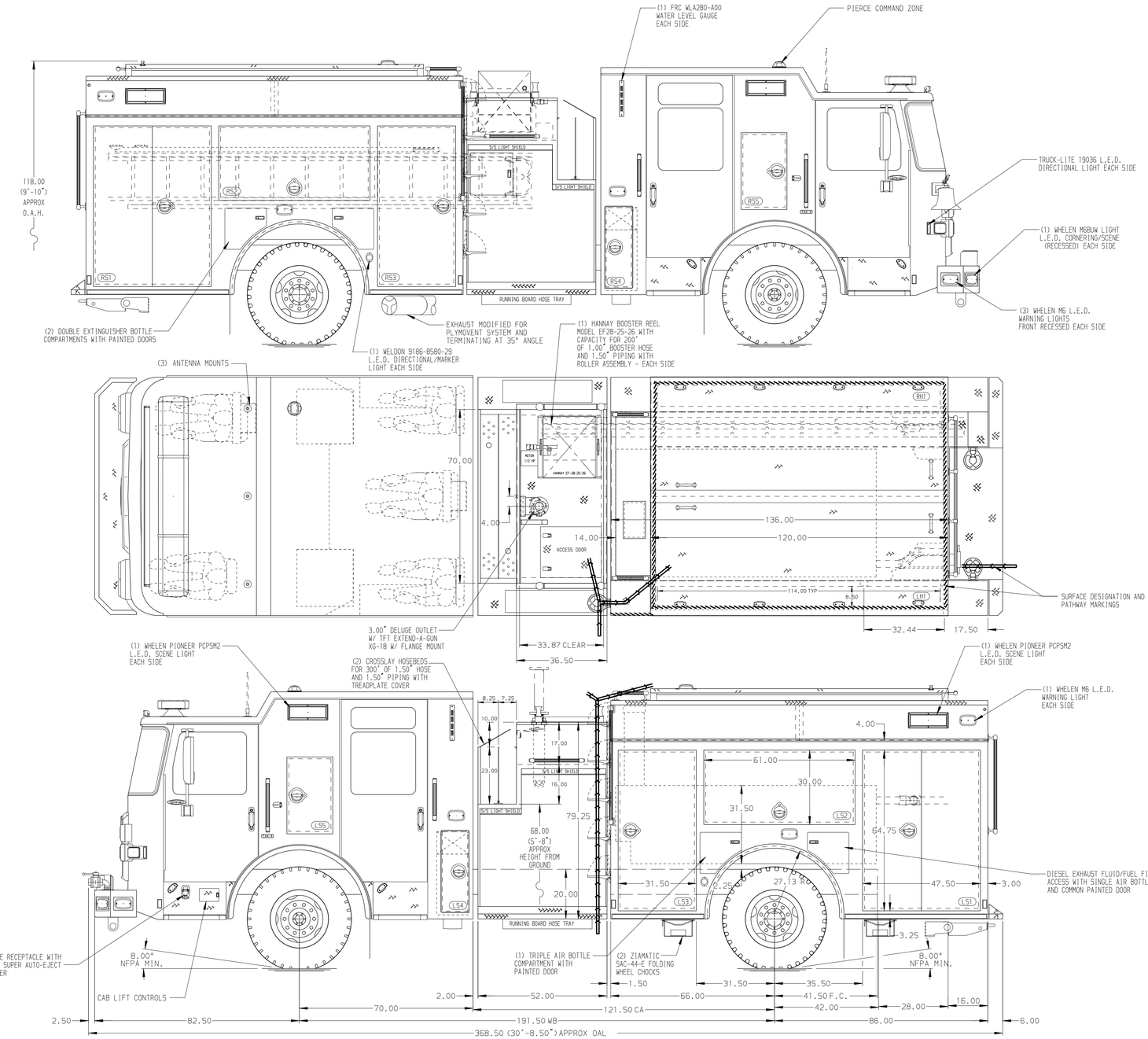


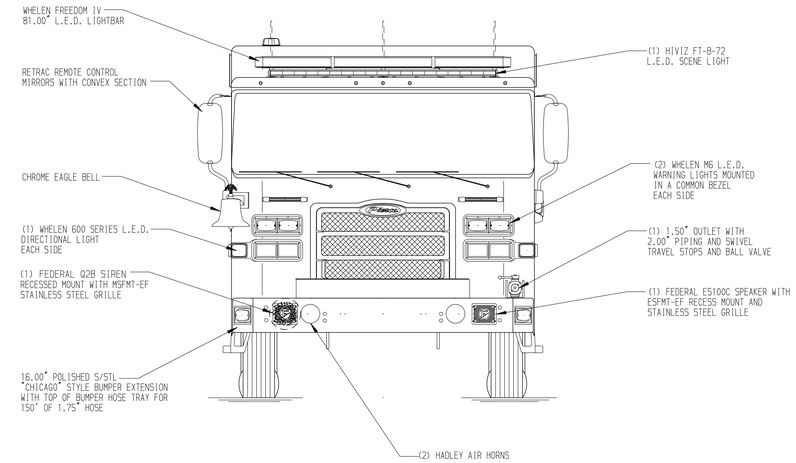


HOSEBED CAPACITIES

1. - 800' OF 4.00" DJP HOSE
2. - 200' OF 2.50" DJP HOSE
3. - 300' OF 1.75" DJP HOSE
4. - 500' OF 3.00" DJP HOSE
5. - 500' OF 2.50" DJP HOSE

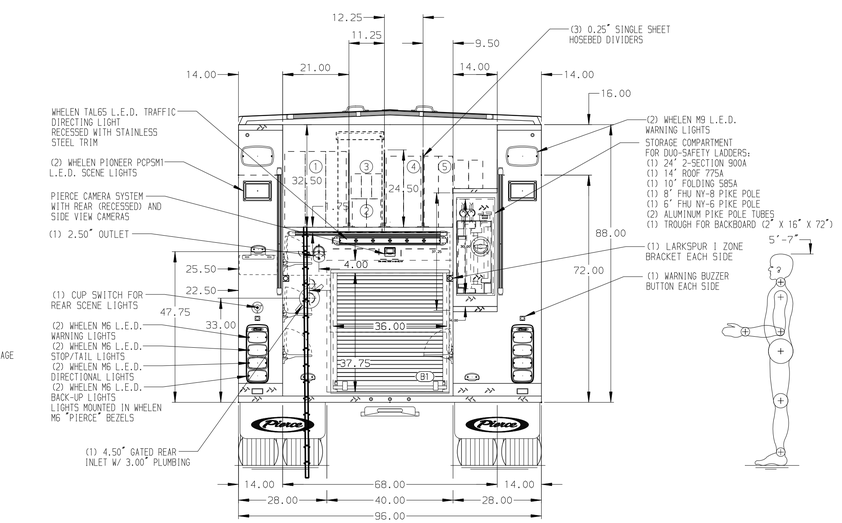


GALVANNEAL

MAXIMUM O.A.H. 119.50"

NOTE

DIMENSIONS SHOWN ARE APPROXIMATE AND ARE SUBJECT TO MINOR DEVIATIONS AS MAY OCCUR OR BE NECESSARY IN CONSTRUCTION.
MINOR DETAILS NOT SHOWN.

1. AIR INLET/OUTLET WITH DISCONNECT COUPLING AND 1/4 TURN VALVE IN THE DRIVER'S SEAT RISER
2. KUSSMAUL BATTERY CHARGER LOCATED BEHIND DRIVER'S SEAT
3. BATTERY CHARGER INDICATOR LOCATED ON DRIVER'S SEAT RISER

| REV | DATE | BY | CH |
|---|---|---|---|
| 7 | 01OCT24 | LST | BSE |
| 6 | 27AUG24 | LST | BSE |
| 5 | 10JUL24 | LST | BSE |

CHASSIS DATA
MAKE: PIERCE
MODEL: ENFORCER

Pierce MANUFACTURING INC.

TITLE: 1500 GPM, 500 GAL WATERTANK 152" BODY, MUX
FOR: OAKLAND FIRE DEPARTMENT OAKLAND, CALIFORNIA
DWG NO.: 38999AD-SH1

| JOB NO. | 38999 |
|---|---|
| SCALE | 1:24 |
| DATE | |
| DRAWN BY | LST 17JUN24 |
| CHECKED BY | BSE 19JUN24 |
| SHEET SIZE | D |
| SHEET NO. | 1 OF 2 |

View File Created 14-JAN-2025 09:30:47