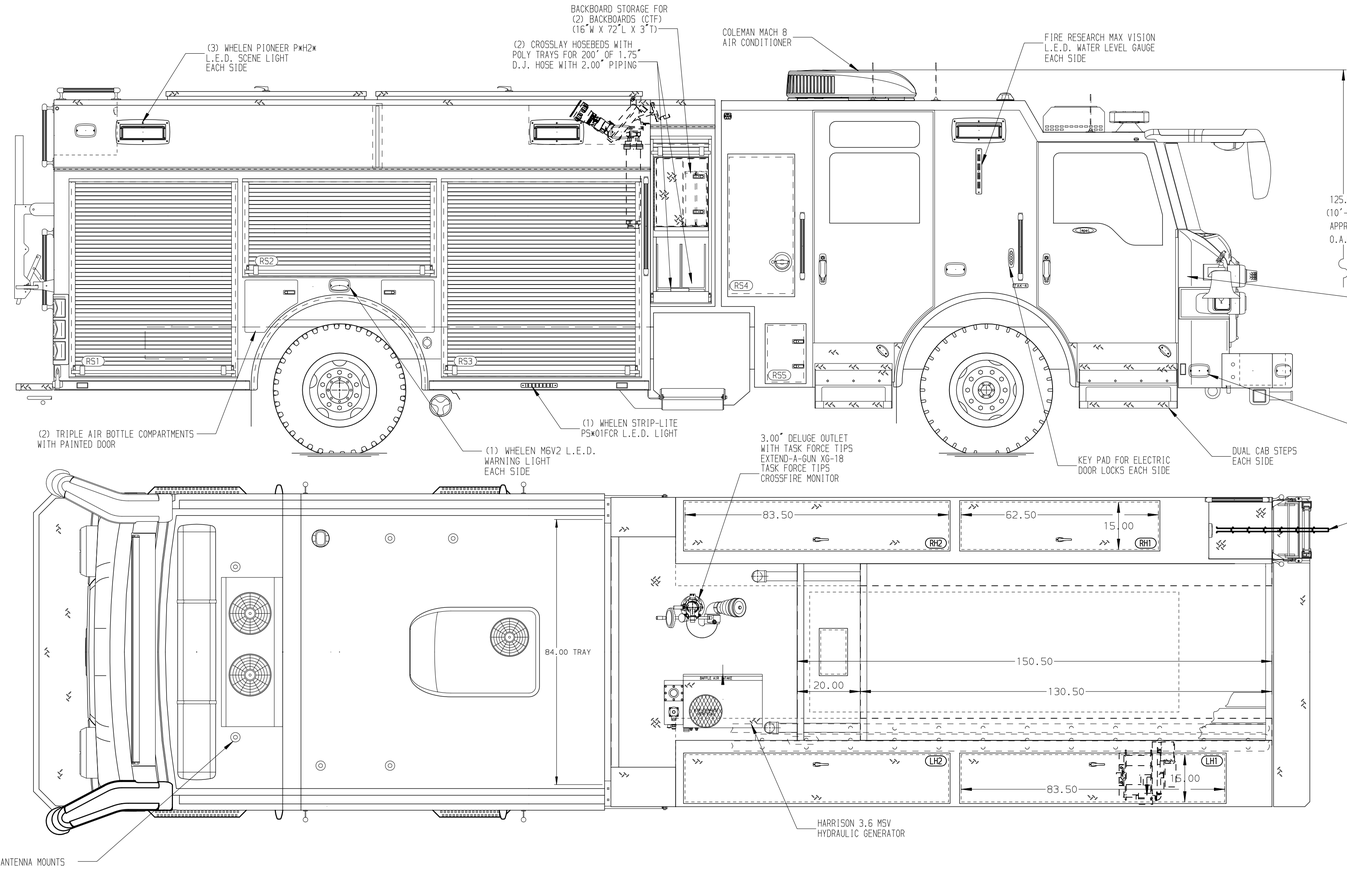

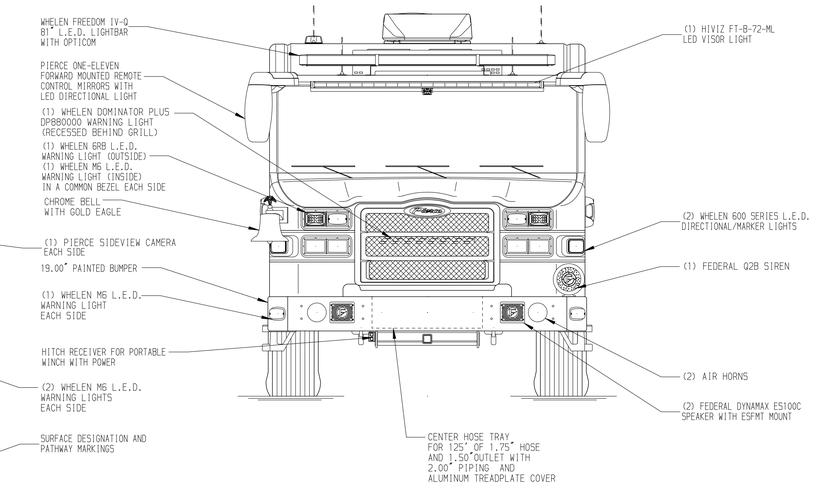

HOSEBED CAPACITIES

1 - 250' OF 2.50" D.J. POLY HOSE
2 - 1000' OF 5.00" D.J. POLY HOSE
3 - 300' OF 3.00" D.J. POLY HOSE
4 - 250' OF 2.50" D.J. POLY HOSE

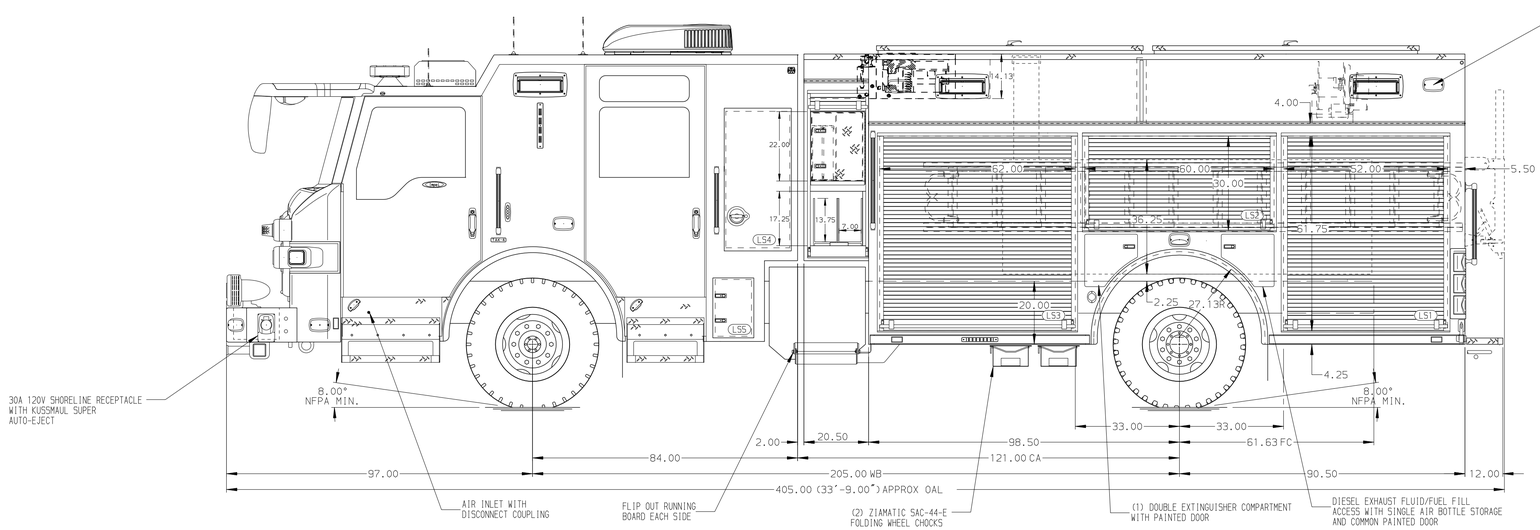

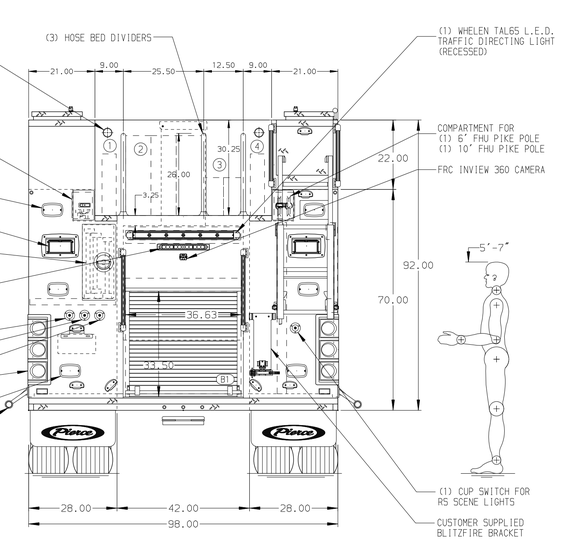

ALUMINUM BODY

NOTE

DIMENSIONS SHOWN ARE APPROXIMATE AND ARE SUBJECT TO MINOR DEVIATIONS AS MAY OCCUR OR BE NECESSARY IN CONSTRUCTION.
MINOR DETAILS NOT SHOWN.

1. KUSSMAUL BATTERY CHARGER LOCATED IN RS4 MOUNTED AS HIGH AS POSSIBLE
2. BATTERY CHARGE INDICATOR LOCATED NEAR DRIVER'S SEAT RISER WITH BRACKET
3. SUB-FEED CIRCUIT BREAKER PANEL IN COMPARTMENT RS3
4. DUAL L.E.D. LIGHT STRIPS LOCATED IN HOSE BED
5. CIRCUIT BREAKER PANEL IN COMPARTMENT RS3
6. ONE HANNAY ELECTRIC REWIND CORD REEL MODEL 1618-17-18 LOCATED IN LH1

REV	DATE	BY	CH
E	24JAN25	JAM	ZWE
D	09JAN25	JAM	ZWE
C	17OCT24	JAM	ZWE
B	30SEP24	JAM	ZWE
A	16AUG24	JAM	JKR

CHASSIS DATA
MAKE: PIERCE
MODEL: IMPEL FR

Pierce MANUFACTURING INC.

TITLE: 1500 GPM, 600G WATER TANK 189" PUC RESCUE, MUX
FOR: TARPON SPRINGS TARPON SPRINGS, FLORIDA
DWG NO.: 38952AD

JOB NO.	38952
SCALE	1:24
DATE	
DRAWN BY	JAM 06JUN24
CHECKED BY	SJS 05JUN24
SHEET SIZE	D
SHEET NO.	1 OF 1

View File Created 24-JAN-2025 11:53:15